This .pdf document is bookmarked

Operating Instructions and Parts Manual

14-inch Vertical Band Saws

Models: J-8201, J-8203, J-8201VS, J-8203VS

JET
427 New Sanford Road
LaVergne, Tennessee 37086
Ph.: 800-274-6848
www.jettools.com

Part No. M-414500
Revision E 10/2016
Copyright © 2016 JET

Warranty and Service

JET warrants every product it sells against manufacturers' defects. If one of our tools needs service or repair, please contact Technical Service by calling 1-800-274-6846, 8AM to 5PM CST, Monday through Friday.

Warranty Period
The general warranty lasts for the time period specified in the literature included with your product or on the official JET branded website.

- JET products carry a limited warranty which varies in duration based upon the product. (See chart below)
- Accessories carry a limited warranty of one year from the date of receipt.
- Consumable items are defined as expendable parts or accessories expected to become inoperable within a reasonable amount of use and are covered by a 90 day limited warranty against manufacturer's defects.

Who is Covered
This warranty covers only the initial purchaser of the product from the date of delivery.

What is Covered
This warranty covers any defects in workmanship or materials subject to the limitations stated below. This warranty does not cover failures due directly or indirectly to misuse, abuse, negligence or accidents, normal wear-and-tear, improper repair, alterations or lack of maintenance. JET woodworking machinery is designed to be used with Wood. Use of these machines in the processing of metal, plastics, or other materials outside recommended guidelines may void the warranty. The exceptions are acrylics and other natural items that are made specifically for wood turning.

Warranty Limitations
Woodworking products with a Five Year Warranty that are used for commercial or industrial purposes default to a Two Year Warranty. Please contact Technical Service at 1-800-274-6846 for further clarification.

How to Get Technical Support
Please contact Technical Service by calling 1-800-274-6846. **Please note that you will be asked to provide proof of initial purchase when calling.** If a product requires further inspection, the Technical Service representative will explain and assist with any additional action needed. JET has Authorized Service Centers located throughout the United States. For the name of an Authorized Service Center in your area call 1-800-274-6846 or use the Service Center Locator on the JET website.

More Information
JET is constantly adding new products. For complete, up-to-date product information, check with your local distributor or visit the JET website.

How State Law Applies
This warranty gives you specific legal rights, subject to applicable state law.

Limitations on This Warranty
JET LIMITS ALL IMPLIED WARRANTIES TO THE PERIOD OF THE LIMITED WARRANTY FOR EACH PRODUCT. EXCEPT AS STATED HEREIN, ANY IMPLIED WARRANTIES OF MERCHANTABILITY AND FITNESS FOR A PARTICULAR PURPOSE ARE EXCLUDED. SOME STATES DO NOT ALLOW LIMITATIONS ON HOW LONG AN IMPLIED WARRANTY LASTS, SO THE ABOVE LIMITATION MAY NOT APPLY TO YOU.
JET SHALL IN NO EVENT BE LIABLE FOR DEATH, INJURIES TO PERSONS OR PROPERTY, OR FOR INCIDENTAL, CONTINGENT, SPECIAL, OR CONSEQUENTIAL DAMAGES ARISING FROM THE USE OF OUR PRODUCTS. SOME STATES DO NOT ALLOW THE EXCLUSION OR LIMITATION OF INCIDENTAL OR CONSEQUENTIAL DAMAGES, SO THE ABOVE LIMITATION OR EXCLUSION MAY NOT APPLY TO YOU.

JET sells through distributors only. The specifications listed in JET printed materials and on official JET website are given as general information and are not binding. JET reserves the right to effect at any time, without prior notice, those alterations to parts, fittings, and accessory equipment which they may deem necessary for any reason whatsoever. JET® branded products are not sold in Canada by JPW Industries, Inc.

Product Listing with Warranty Period

90 Days – Parts; Consumable items
1 Year – Motors; Machine Accessories
2 Year – Metalworking Machinery; Electric Hoists, Electric Hoist Accessories; Woodworking Machinery used for industrial or commercial purposes
5 Year – Woodworking Machinery
Limited Lifetime – JET Parallel clamps; VOLT Series Electric Hoists; Manual Hoists; Manual Hoist Accessories; Shop Tools; Warehouse & Dock products; Hand Tools; Air Tools

NOTE: JET is a division of JPW Industries, Inc. References in this document to JET also apply to JPW Industries, Inc., or any of its successors in interest to the JET brand.

Table of contents

Section **Page**

Warranty and Service....2
Table of contents....3
Warning....4
Machinery General Safety Warnings....4
General Electrical Cautions....5
Switch Padlock....5
Safety Instructions for Sawing Systems....6
Specifications....7
Introduction....8
Band Saw Features....8
Setup and Operation....8
  Set-up....8
Electrical....9
  Connecting to 3-phase power....9
  GROUNDING INSTRUCTIONS....9
  Installing Optional Frame Riser....12
  Installing Optional Rip Fence....12
Operating Controls....13
  START/STOP Switch....13
  Variable Speed Control (Models J-8201VS/J-8203VS)....13
Operating Instructions....13
  Saw blades....13
Adjustments....14
  Adjusting Blade Support/Guide Height....14
  Adjusting Blade Tension....14
  Adjusting Table Angle....14
  Leveling Work Table....14
  Adjusting Miter Gauge Slot Parallelism....15
  Adjusting Blade Speed (Models J-8201/J-8203)....15
  Adjusting Blade Speed (Models J-8201VS/J-8203VS)....15
  Changing Clutch Position....15
  Changing Drive Belt Position....16
  Changing Pulley-to-Belt Position....16
  Using Miter System....17
  Using Rip Fence....17
  Using the Dust Control Chute....17
Maintenance....17
  Changing Saw Blade....17
  Replacing drive wheel rubber protectors....19
  Draining and refilling the reduction gearbox....19
Periodic Maintenance....19
Troubleshooting....19
Periodic Maintenance....20
Troubleshooting the J-8201/8203/8201VS/8203VS....21
Replacement Parts....22
  Exploded View and Parts List – Base – Models J-8201 and J-8203....23
  Exploded View and Parts List – Base – Models J-8201VS and J-8203VS....24
  Exploded View – Saw Head – Models J-8201,J-8203,J-8201VS and J-8203VS....25
  Parts List – Saw Head – Models J-8201,J-8203,J-8201VS and J-8203VS....26
  Exploded View – Gearbox – Models J-8201 and J-8203....28
  Parts List – Gearbox – Models J-8201 and J-8203....29
  Exploded View – Gearbox – Models J-8201VS and J-8203VS....30
  Parts List – Gearbox – Models J-8201VS and J-8203VS....31
  Exploded View and Parts List – 5782181 Optional Riser Block – All Models....32
  Rip Fence Assembly (Optional Equipment)....33
Electrical Connections....35

Warnings

- Misuse of this machine can cause serious injury.
- For safety, machine must be set up, used and serviced properly.
- Read, understand and follow instructions in the Operating Instructions and Parts Manual which was shipped with your machine.

When setting up machine:

- Always avoid using machine in damp or poorly lighted work areas.
- Always be sure the machine support is securely anchored to the floor or the work bench.

When using machine:

- Always wear safety glasses with side shields (See ANSI Z87.1)
- Never wear loose clothing or jewelry.
- Never overreach—you may slip and fall.

When servicing machine:

- Always disconnect the machine from its electrical supply while servicing.
- Always follow instructions in Operating Instructions and Parts Manual when changing accessory tools or parts.
- Never modify the machine without consulting JET Tools.

You—the stationary power tool user—hold the key to safety.

Read and follow these simple rules for best results and full benefits from your machine. Used properly, JET machinery is among the best in design and safety. However, any machine used improperly can be rendered inefficient and unsafe. It is absolutely mandatory that those who use our products be properly trained in how to use them correctly. They should read and understand the Operating Instructions and Parts Manual as well as all labels affixed to the machine. Failure in following all of these warnings can cause serious injuries.

Machinery General Safety Warnings

1. KEEP GUARDS IN PLACE and in working order.
2. REMOVE ADJUSTING KEYS AND WRENCHES. Form habit of checking to see that keys and adjusting wrenches are removed from tool before turning it on.
3. KEEP WORK AREA CLEAN. Cluttered areas and benches invite accidents.
4. DON’T USE IN DANGEROUS ENVIRONMENT. Don’t use power tools in damp or wet locations, or expose them to rain. Keep work area well lighted.
5. KEEP CHILDREN AWAY. All visitors should be kept a safe distance from work area.
6. MAKE WORKSHOP KID PROOF with padlocks, master switches, or by removing starter keys.
7. DON’T FORCE TOOL It will do the job better and safer at the rate for which it was designed.
8. USE RIGHT TOOL Don’t force tool or attachment to do a job for which it was not designed.
9. USE PROPER EXTENSION CORD. Make sure your extension cord is in good condition. When using an extension cord, be sure to use one heavy enough to carry the current your product will draw. An under-sized cord will cause a drop in line voltage resulting in loss of power and overheating. Table 1 shows the correct size to use depending on cord length and name-plate ampere rating. If in doubt, use the next heavier gage. The smaller the gage number, the heavier the cord.
10. WEAR PROPER APPAREL Do not wear loose clothing, gloves, neckties, rings, bracelets, or other jewelry which may get caught in moving parts. Non-slip footwear is recommended. Wear protective hair covering to contain long hair.
11. WEAR EYE PROTECTION. Always use safety glasses. Also use face or dust mask if cutting operation is dusty. Everyday eyeglasses only have impact resistant lenses, they are NOT safety glasses.
12. SECURE WORK. Use clamps or a vise to hold work when practical. It’s safer than using your hand and it frees both hands to operate tool.
13. DON’T OVERREACH. Keep proper footing and balance at all times.
14. MAINTAIN TOOLS WITH CARE. Keep tools sharp and clean for best and safest performance. Follow instructions for lubricating and changing accessories.
15. DISCONNECT TOOLS before servicing; when changing accessories, such as blades, bits, cutters, and the like.

16. REDUCE THE RISK OF UNINTENTIONAL STARTING. Make sure switch is in off position before plugging in.
17. USE RECOMMENDED ACCESSORIES. Consult the owner's manual for recommended accessories. The use of improper accessories may cause risk of injury to persons.
18. NEVER STAND ON TOOL. Serious injury could occur if the tool is tipped or if the cutting tool is unintentionally contacted.
19. CHECK DAMAGED PARTS. Before further use of the tool, a guard or other part that is damaged should be carefully checked to determine that it will operate properly and perform its intended function - check for alignment of moving parts, binding of moving parts, breakage of parts, mounting, and any other conditions that may affect its operation. A guard or other part that is damaged should be properly repaired or replaced.
20. DIRECTION OF FEED. Feed work into a blade or cutter against the direction of rotation of the blade or cutter only.
21. NEVER LEAVE TOOL RUNNING UNATTENDED. TURN POWER OFF. Don't leave tool until it comes to a complete stop.
22. DO NOT REMOVE JAMMED CUTOFF PIECES until the blade has stopped.
23. MAINTAIN PROPER ADJUSTMENT of blade tension, blade guides and thrust bearings.
24. ADJUST UPPER BLADE GUIDE TO JUST CLEARWORKPIECE.
25. HOLD WORKPIECE FIRMLY AGAINST TABLE.

General Electrical Cautions

This saw should be grounded in accordance with the National Electrical Code and local codes and ordinances. This work should be done by a qualified electrician. The saw should be grounded to protect the user from electrical shock.

Caution: For circuits which are far away from the electrical service box, the wire size must be increased in order to deliver ample voltage to the motor. To minimize power losses and to prevent motor overheating and burnout, the use of wire sizes for branch circuits or electrical extension cords according to the following table is recommended.

Ampere Rating		Volts	Total length of cord in feet			
		120 V	25 ft.	50 ft.	100 ft.	150 ft.
		240 V	50 ft.	100 ft.	200 ft.	300 ft.
More than	Not more than	AWG minimum gage				
0	6		18	16	16	14
6	10		18	16	14	12
10	12		16	16	14	12
12	16		14	12	Not recommended	
Only the applicable parts of the Table need to be included. For instance, a 120-volt product need not include the 240-volt heading.						

Switch Padlock

To safeguard your machine from unauthorized operation and to avoid accidental starting by young children, the use of a padlock (not provided) is highly recommended.

To lock the main switch in the OFF position, remove the switch key from the switch. Place the key in a location that is inaccessible to children and others not qualified to use the tool.

1. Open the padlock (Fig. A).
2. Insert through holes in the start button (Fig. B).
3. Close the padlock.
4. Place the key in a safe place and out of reach of children.

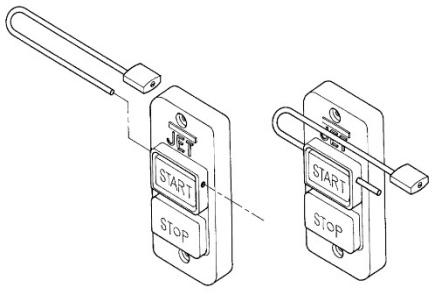

Figure A Figure B

For three phase tools without the lock-off feature, observe the following instruction: The installer shall follow local regulations and National Electrical Code, ANSI/NFPA 70 installation requirements.

Safety Instructions for Sawing Systems

1. Always wear leather gloves when handling saw blade. The operator shall not wear gloves when operating the machine.
2. All doors shall be closed, all panels replaced, and other safety guards in place prior to the machine being started or operated.
3. Be sure that the blade is not in contact with the workpiece when the motor is started. The motor shall be started and you should allow the saw to come up to full speed before bringing the saw blade into contact with the workpiece.
4. Keep hands away from the blade area. **See Figure A.**
5. Remove any cut off piece carefully while keeping your hands free of the blade area.
6. Saw must be stopped and electrical supply must be cut off before any blade replacement or adjustment of blade support mechanism is done, or before any attempt is made to change the drive belts or before any periodic service or maintenance is performed on the saw.7.
7. Remove loose items and unnecessary workpieces from area before starting machine.
8. Bring adjustable saw guides and guards as close as possible to the workpiece.
9. Always wear protective eye wear when operating, servicing, or adjusting machinery. Eyewear shall be impact resistant, protective safety glasses with side shields complying with ANSIZ87.1 specifications. Use of eye wear which does not comply with ANSI Z87.1 specifications could result in severe injury from breakage of eye protection. **See Figure B**.
10. Nonslip footwear and safety shoes are recommended. **See Figure C.**
11. Wear ear protectors (plugs or muffs) during extended periods of operation. **See Figure D**.
12. The workpiece, or part being sawed, must be securely clamped before the saw blade enters the workpiece.
13. Remove cut off pieces carefully, keeping hands away from saw blade.
14. Saw must be stopped and electrical supply cutoff or machine unplugged before reaching into cutting area.
15. Avoid contact with coolant, especially guarding your eyes.

A

B

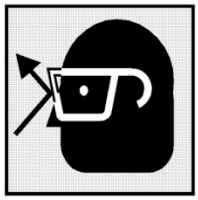

C

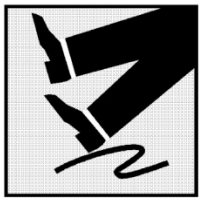

D

Specifications

JET's 14-inch Vertical Band Saws are specially designed to effectively cut a variety of materials including wood, plastic, bakelite, composites, ferrous and non-ferrous metals. Models J-8201 and J-8203 are wood and metal cutting band saws. JET's Model J-8201VS and J-8203VS 14-inch Variable Speed Band Saws are ideally suited for metal cutting only with an infinitely variable speed range from116 to 334 SFPM. The variable speed drive system allows the operator to fine-tune the blade speed to the material being cut to maximize the life of today's bi-metal blades. These versatile and dependable saws are capable of contour cutting, straight cutting and resawing, and these band saws can cut delicate curves in thick or thin stock.

Model number	J-8201K	J-8203K	J-8201VS	J-8203VS
Stock number	414500	414504C	414502	414503
Capacities:				
Under Guide (in.)	6	6	6	6
Under Guide with Riser Block (in.)	12	12	12	12
Throat Capacity (in.)	13.5	13.5	13.5	13.5
Blade Width Capacity (in.)	1/8 to 3/4	1/8 to 3/4	1/8 to 3/4	1/8 to 3/4
Motor:				
Rating	1HP 1PH	1HP 3PH	1HP 1PH	1HP 3PH
Voltage	115/230 VAC (Prewired 115V)	230/460 VAC (Prewired 230V)	115/230 VAC (Prewired 115V)	230/460 VAC (Prewired 230V)
Listed Full Load Amps	10/5 A	3.6/1.8 A	10/5 A	3.6/1.8 A
Speed	1725 RPM	1725 RPM	1725 RPM	1725 RPM
Cutting Speeds:				
Wood (SFPM)	3300	3300	2600	2600
Metal (SFPM)	39,57,78,107 142,196,278	39,57,78,107, 142,196,278	90-340 Variable speed	90-340 Variable speed
Table:				
Size (in.)	14 x 14	14 x 14	14 x 14	14 x 14
Height from Floor (in.)	44	44	44	44
Tilt to Right	45 deg.	45 deg.	45 deg.	45 deg.
Tilt to Left	15 deg.	15 deg.	15 deg.	15 deg.
Miter Gauge Groove (WxD/in.)	3/4 x 3/8	3/4 x 3/8	3/4 x 3/8	3/4 x 3/8
Miter Gauge	standard	standard	standard	standard
Noise emission (tested @3ft from machine):				
Idle	70 dB	70 dB	70 dB	70 dB
With load	75 dB	75 dB	75 dB	75 dB
Blade Dimensions (in.)	3/8 x 0.025 x 93.5	3/8 x 0.025 x 93.5	3/8 x 0.025 x 93.5	3/8 x 0.025 x 93.5
Floor Space Required (LxWxH/in.)	26x18-1/2x67	26x18-1/2x67	26x18-1/2x67	26x18-1/2x67
Net Weight (lb)	171	155	325	325

The specifications in this manual were current at time of publication, but because of our policy of continuous improvement, JET reserves the right to change specifications at any time and without prior notice, without incurring obligations.

Introduction

This manual includes operating and maintenance instructions for the JET 14-Inch Vertical Band Saws, Models J-8201, J-8203, J-8201VS, and J-8203VS. This manual also includes parts listings and illustrations of replaceable parts.

Band Saw Features

Refer to Figures 1 through 3 for key features of the band saw. Refer to the Specifications section for additional information on the features and capabilities of the saw.

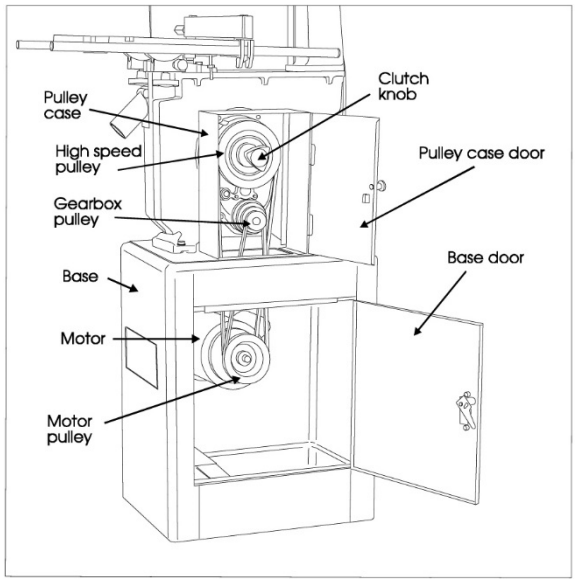

Figure 1: Band Saw Features - Rear View (Models J-8201/J-8203)

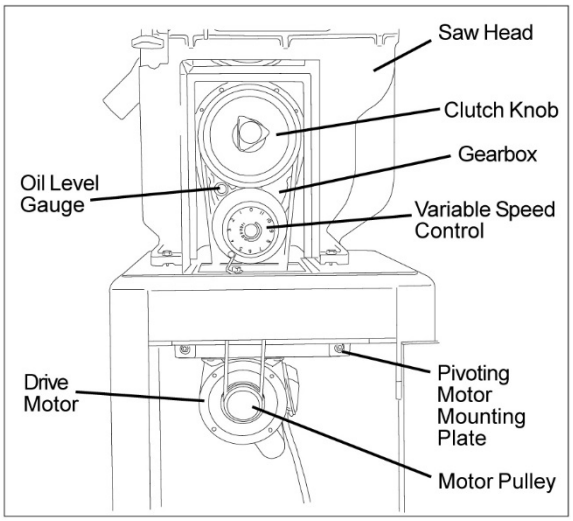

Figure 2: Band Saw Features – Rear View (Models J-8201VS/J-8203VS)

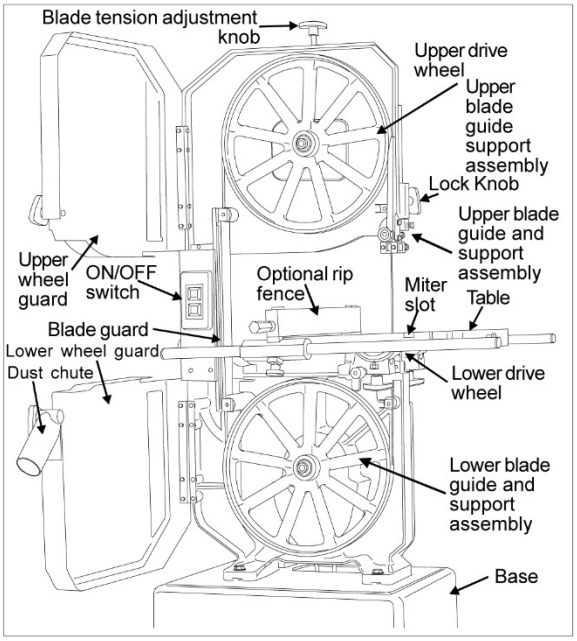

Figure 3: Band Saw Features – Front View (All Models

Setup and Operation

Set-up

1. The saw should be bolted securely to the shop floor to make sure the saw is stable when sawing long, heavy or unwieldy work pieces. Always use extra support for long or heavy stock. There are lugs in the bottom of the saw base for use in bolting down of the saw. After positioning the saw, open the door in the base and mark the positions of the four lug holes. Move the saw to expose the marks. Prepare for attachment as required by the attachment method being used. Install the applicable fasteners. Install shims as required to level the saw. Tighten the fasteners to secure the saw to the floor.
2. Check belt tension (refer to Changing Drive Belt Position).
3. Check gearbox fluid level in sight gauge. If required, add lubricant to bring level halfway up the sight gauge. (Two containers of Shell Spirax 90 HD gear oil are packed with the saw. The containers have sufficient amount of lubricant to fill the gearbox.)
4. Check blade tension and support mechanism adjustment (refer to Changing Saw Blades).
5. Connect power to the saw. For 3-phase motors, follow the instructions in the Electrical section to complete the electrical hookup.

NOTE: Observe all electrical codes. Local codes or difficult environmental conditions may demand special electrical hook-ups. Always use a licensed electrician for any special electrical hook-up.

Electrical

Models J-8201 and J-8201VS are delivered with a 115 volt single phase motor. Models J-8203 and J-8203VS are delivered with a 220/440 volt, 3-phase motor.

When the saw is a 115 volt model, it is supplied with a standard 115 volt plug and power cord which can be plugged into any suitable branch circuit.

When the saw is equipped with a 3-phase motor there will be no plug on the 4-wire cable to the saw switchbox. Instead, follow these instructions to connect the 3-phase motor to the power source:

Connecting to 3-phase power

1. Disconnect and lock out the branch circuit to the saw before attempting electrical connections.
2. Connect the green or green-with-white-trace wire to the branch circuit ground wire.
3. Connect the remaining three wires to the power wires in the 3-phase branch circuit.
4. Reestablish power in the electrical branch.
5. Turn on power to the saw motor using the switch.
6. Observe the direction of the blade. It should be going DOWNWARD, into the slot on the table. If it is not going downward, the power wires are hooked-up incorrectly.
7. To correct hook-up, disconnect and lock out power to the branch, again. Reverse any two of the power wires on the hook-up to the saw cable.
8. Reestablish power in the branch and turn the saw on again. The blade should now be going downward into the table slot.

Note: local electrical codes or other codes may require direct connection to a covered, protected junction box, or other electrical hook-up method. Especially under difficult industrial conditions, specialized electrical connections may be necessary. For special electrical hook-ups, a licensed electrician should be used to connect the saw to power.

CAUTION: KNOW AND OBSERVE ALL LOCAL AND OTHER APPROPRIATE ELECTRICAL CODES WHEN ATTACHING THIS BAND SAW TO YOUR POWER SUPPLY.

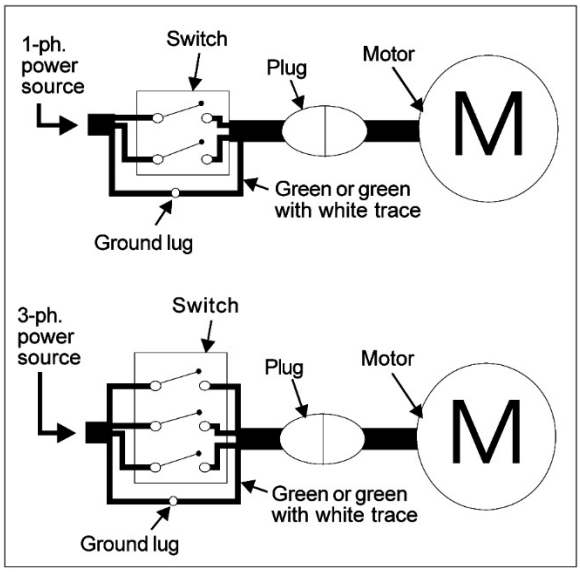

Figure 4: Wiring Diagrams

GROUNDING INSTRUCTIONS

1. All grounded, cord-connected tools:

In the event of a malfunction or breakdown, grounding provides a path of least resistance for electric current to reduce the risk of electric shock. This tool is equipped with an electric cord having an equipment-grounding conductor and a grounding plug. The plug must be plugged into a matching outlet that is properly installed and grounded in accordance with all local codes and ordinances.

Do not modify the plug provided - if it will not fit the outlet; have the proper outlet installed by a qualified electrician.

Improper connection of the equipment-grounding conductor can result in a risk of electric shock. The conductor with insulation having an outer surface that is green with or without yellow stripes is the equipment-grounding conductor. If repair or replacement of the electric cord or plug is necessary, do not connect the equipment-grounding conductor to a live terminal.

Check with a qualified electrician or service personnel if the grounding instructions are not completely understood, or if in doubt as to whether the tool is properly grounded.

Use only 3-wire extension cords that have 3-pronggrounding plugs and 3-pole receptacles that accept the tool's plug.

Repair or replace damaged or worn cord immediately.

2. Grounded, cord-connected tools intended for use on a supply circuit having a nominal rating less than 150 volts:

This tool is intended for use on a circuit that has an outlet that looks like the one illustrated in Sketch A. The tool has a grounding plug that looks like the plug illustrated in Figure 5-A. A temporary adapter, which looks like the adapter illustrated in Figure 5-B and C, may be used to connect this plug to a 2-pole receptacle as shown in Sketch B if a properly grounded outlet is not available. The temporary adapter should be used only until a properly grounded outlet can be installed by a qualified electrician. **(This adapter is not permitted in Canada.)** The green-colored rigid ear, lug, and the like, extending from the adapter must be connected to a permanent ground such as a properly grounded outlet box.

3. Grounded, cord-connected tools intended for use on a supply circuit having a nominal rating between 150 – 250 volts, inclusive:

This tool is intended for use on a circuit that has an outlet that looks like the one illustrated in Figure 5-A. The tool has a grounding plug that looks like the plug illustrated in Sketch A. Make sure the tool is connected to an outlet having the same configuration as the plug. No adapter is available or should be used with this tool. If the tool must be reconnected for use on a different type of electric circuit, the reconnection should be made by qualified service personnel; and after reconnection, the tool should comply with all local codes and ordinances.

4. Permanently connected tools:

This tool should be connected to a grounded metal permanent wiring system; or to a system having an equipment-grounding conductor.

For 115/230V

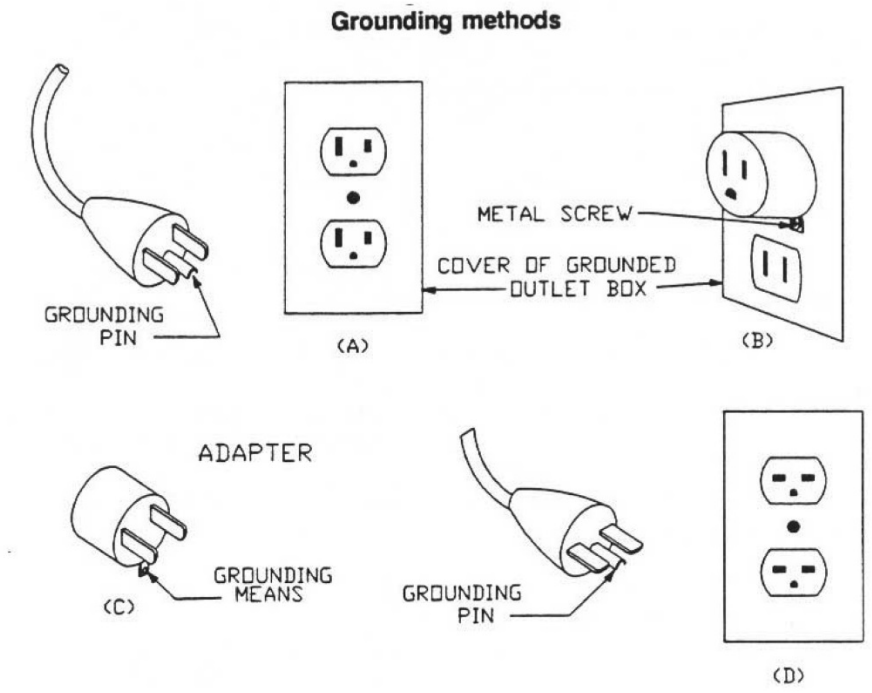

For 115 only

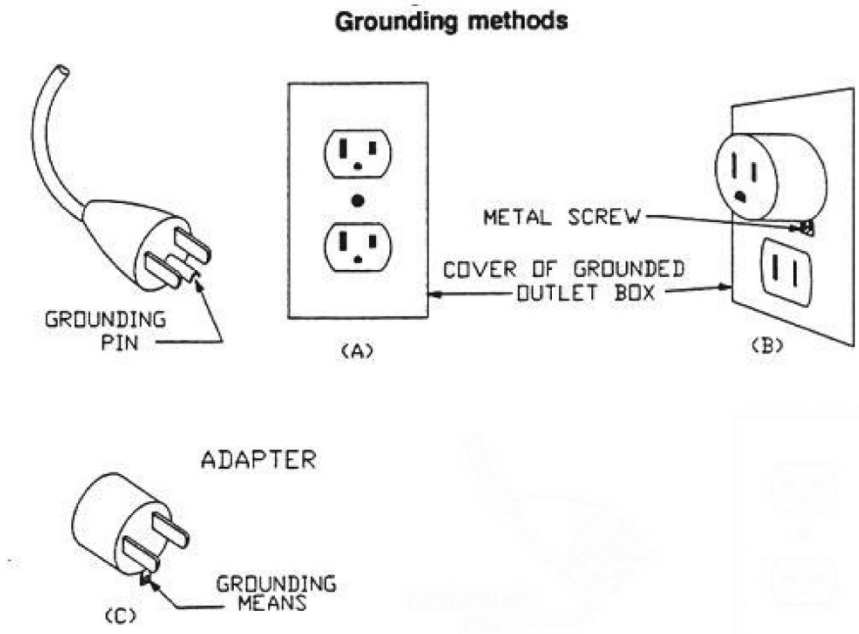

Figure 5: Grounding methods

Installing Optional Frame Riser

NOTE: Refer to the illustrations in the Replacement Parts section for location of the parts used on the frame riser.

1. Remove the saw blade (refer to *Changing Saw Blade).*
2. Remove the two screws at the top and bottom of the blade guide that holds the blade guide on the frame.

WARNING: The saw must be turned off and power disconnected any time the rubber protectors are being changed.

3. Unplug the electrical cord or open the circuit breaker in the branch circuit.
4. Support the upper frame and wheel assembly with a strap attached to an overhead crane. Use additional straps to be sure the frame assembly will be held in a stable position when it is lifted off the lower frame assembly.
5. Remove the nut on the bolt that clamps the upper frame to the lower frame and remove the bolt, two washers and nut.
6. Lift the upper frame high enough off the lower frame to clear the riser casting.
7. Be certain the mating surfaces of the lower frame, riser, and upper frame are all clean and free from dirt and debris.
8. Position the riser casting over the lower frame. Make sure the locating dowels are inserted in the mating holes in the riser casting.
9. Lower the upper frame onto the riser casting. Make sure the locating dowels fit into their mating holes.
10. Put the new (longer) attaching bolt and top washer through the upper frame and riser, into the lower frame.
11. Put a washer and nut on the bolt and tighten securely.
12. Attach the bracket hooks to the top and bottom of the blade guard using self-tapping screws.
13. Attach the blade guide using the screws that held the original (shorter) guard.
14. Remove the old (shorter) blade guide post assembly from the upper frame.
15. The guide support assembly with the carbide guides and blade support bearings should be transferred to the new, longer support rod. Several other new parts are included for this component. (Refer to the parts illustrations for more detail.)
16. Install a new 105-inch blade (refer to Changing a Blade). Make sure blade tension and tracking are checked and adjusted as required.
17. Install the extension plug cable between the motor plug and switch plug.
18. Plug the electrical cord into the power source or close the circuit breaker on the branch circuit. Operate the band saw to verify blade tracking.

Installing Optional Rip Fence

The rip fence slides on two rails attached at the front and rear of the work table. Install the fence mechanism as follows:

NOTE: Refer to the illustrations in the Replacement Parts section for location of the parts used on the rip fence.

1. Slide the rails into the fence.
2. Ease the fence and rails into position on the table.
3. Using the four spacers and four attachment bolts, attach the rails securely to the saw table.
4. The fence can now be adjusted and used according the instructions in Adjustment and Use of Optional Rip Fence.

Operating Controls

START/STOP Switch

The START/STOP switch (refer to Figure 6) is used to turn on the band saw drive motor. The START switch has a molded guard which prevents inadvertent pressing of the START pushbutton.

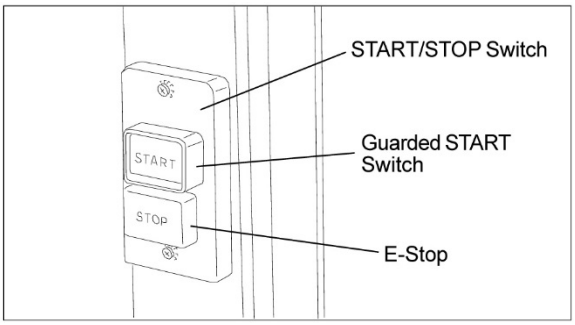

Figure 6: START/STOP Controls

The STOP pushbutton is not guarded to allow use as an E-stop in an emergency.

Variable Speed Control (Models J-8201VS/J-8203VS)

The variable speed control (refer to Figure 10) is used to change the speed of the saw blade. Refer to Adjusting Blade Speed for additional information on the use of the variable speed control.

Operating Instructions

Saw blades

The JET14-inch saws accept blades from 1/8-inchwide to 3/4-inch wide. The narrower widths are used for cutting shapes or circles; the wider widths are used for straight cuts.

For straight cuts, use the widest available saw blade. A wide blade provides cutting stability, and allows for more accurate and straighter cuts. Blade speed affects the efficiency of the cut and the service life of the blade. Good shop practice requires that work-hardening materials, such as stainless steel, require the cut be completed in a single pass. Otherwise, the effect of stopping the cut can result in hardening of the cut interface.

Other materials such as wood require higher blade speeds to prevent fiber tearing. The chart in Figure 6 provides suggested blade speeds for various types of materials. The recommended speeds should be decreased 30 to 50% when using carbon steel blades. (The chart provides speeds that are based on cutting a 4-inch thick work piece using a bi-metal blade without cutting fluid.)

The following conditions should also be considered:

1. Increase speed 15% for materials 1/4-inchthick, 12% for 3/4-inch thick, 10% for 1 1/4-inch thick, and 5% for 2 1/2-inch thick.
2. Decrease speed 12% when cutting 8-inch thick material.

To avoid tooth breakage, select a blade-tooth pitch that will have two or more teeth in contact with the workpiece at all times.

Different blade materials and tooth geometry (pitch and set) permit sawing a wide range of common and exotic materials. Contact your industrial distributor for recommendations on specialized blades. Using the correct blade can save you time, trouble, and the possibility of dulling and premature discarding of the blade you normally might use. NOTE:Always use a sharp blade. SHARP BLADES ARE CHEAP INSURANCE AGAINST POOR CUTTING EFFICIENCY AND ACCELERATED MACHINE WEAR.

Material being cut	Speed (SF/M) range
Structural steel shapes	165
Low carbon steel	160-165
Medium carbon steel	115
High carbon steel	90-100
Cr-moly steel	105-135
Ni-Cr-moly steel	90-115
Chromium steel	80-140
Cr-vanadium steel	105-115
Tool steel	40-80
Stainless steel	40-70
Free machining steel	80-100
Cast iron	55-90
Copper alloy (CU-Zm)	55
Bronze	90
Al-bronze	40
Monel	40-45
Titanium alloy	25-40
Aluminum (soft)	3000
Aluminum (T-6+)	3000
Carbon	3000
Slate	80-160
PTFE sheet, rod, rounds	3000
Hard rubber	3000
Plywood	3000
Other woods	3000

Figure 7: Blade Speed to Material Chart

Adjustments

Adjusting Blade Support/Guide Height

The upper blade support and guide mechanism can be adjusted to accommodate the height of the work piece.

1. To adjust the support, loosen the knob that clamps the support rod, then move the support up or down in its holder. (Refer to Figure 3 for location of the support mechanism.)
2. Adjust the support so that there is space between the support and work piece. Space of approximately 1/8-inch is generally appropriate.

Adjusting Blade Tension

Blade tension is set by a spring loaded tension mechanism on the upper drive wheel. Check the level of the tension device before cutting. The tension for various blade widths is indicated on the casting on the tension device.

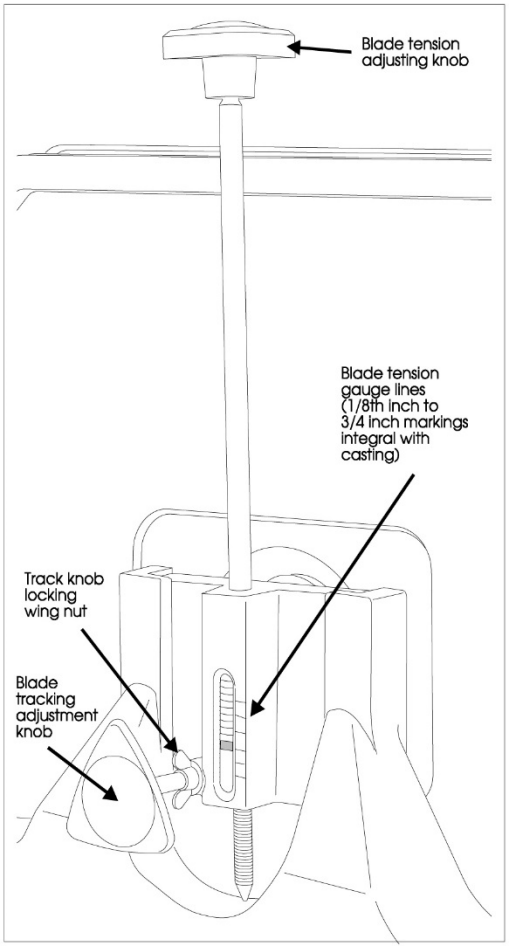

Figure 8: Saw Blade Tension and Tracking Mechanism

Adjusting Table Angle

(Refer to Figure 9.) The angle gauge is under the front of the table. The angle gauge shows the angle of the table relative to the saw blade. The table is mounted on trunnions that allow adjustment downward 45 degrees, and upward 10 degrees. Loosen the two trunnion lock knobs slightly to adjust the table angle and retighten the lock knobs.

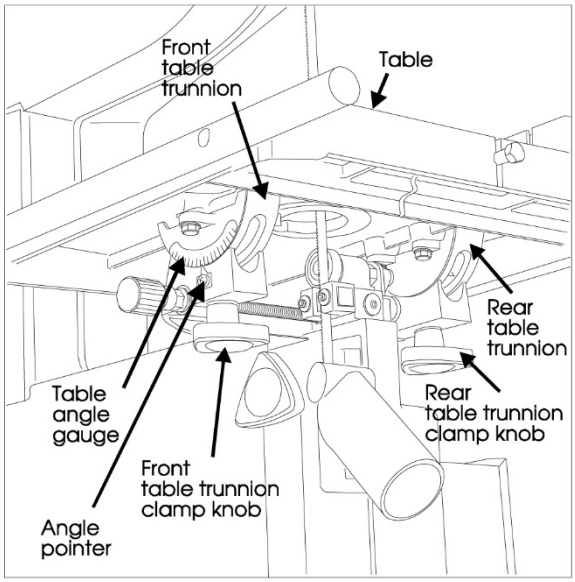

Figure 9: Table Tilt Mechanism and Angle Gauge

NOTE: By adjusting the positive leveling stop on the table leveling mechanism, it is possible to tilt the table upward 10 degrees. When returning to0 degrees, the table leveling mechanism must be reset after completing the sawing operation (refer to Machine Set-up).

WARNING: When cutting at an angle with a tilted table, provide a guide against which the material being cut can rest. Cutting "freehand" at an angle can result in injury, and make it difficult to maintain an accurate cut.

Leveling Work Table

The table can be adjusted to level the table relative to the saw blade. Use the following method:

1. Unplug the electrical cord or open the circuit breaker in the branch circuit.
2. Move the upper blade guide assembly to the very top of its travel.
3. Make sure the blade is straight, and fully tensioned. (A damaged or worn blade may provide a poor reference surface for squaring the table.)
4. Loosen the table lock knobs and hold the table firmly against its positive leveling stop.

5. Using a machinist's square, check to make sure the table is 90 degrees to the blade. USING LEATHER PROTECTIVE GLOVES, turn the upper drive wheel to check the squareness at a minimum of three points on the blade
6. If the table is not level, unlock the lock nut on the table leveling bolt.
7. Turn the leveling bolt as required to make the table square to the blade.
8. Lock the leveling bolt lock nut and recheck the table level. When the table is level.
9. Lock the table lock knobs securely and recheck for level. Adjust as necessary until the table is level while everything is tightened to working tightness.
10. With everything is locked down, look at the pointer for the angle gauge. It should be exactly on the zero mark of the gauge (Figure 13). If not, loosen the pointer screw, adjust the pointer until it is on zero, then tighten the pointer screw while holding the pointer securely in position on zero.

Adjusting Miter Gauge Slot Parallelism

The miter slot should be parallel to the side of the blade. If the saw is not cutting straight when using the miter gauge, the miter slot may not be parallel.

1. Put a straight edge against the blade. Make sure to position the blade so tooth offset does not affect the straight edge.
2. Measure from both ends of the miter slot to the straight edge.
3. If the measurements are not equal at both ends of the slot, loosen six bolts securing the table to the table trunnions (see Figures 13 and 14.)
4. Adjust the table until it is parallel with the blade.
5. Tighten the trunnion attaching bolts.

Adjusting Blade Speed (Models J-8201/J-8203)

Figure 7 provides blade speeds for various materials. To adjust the blade speed, change the clutch position of the clutch (in or out) and the position of the drive belt on the pulleys on the motor and reduction gearbox shafts.

Adjusting Blade Speed (Models J-8201VS/J-8203VS)

See Figure 10.

1. The blade speed is controlled by an adjustment mechanism on the right end of the saw. Speed increases or decreases as the knob is turned.
2. A placard on the drive belt guard (shown below) provides recommended speeds for various materials.
3. A speed indicator is provided on the barrel of the adjustment mechanism. In surface feet per minute; Position 0 = 334, 1 = 262, 2 = 216, 3 =171, 4 = 137, and 5 = 116.
4. Turn the speed adjustment knob to the desired setting as determined by the material being cut.

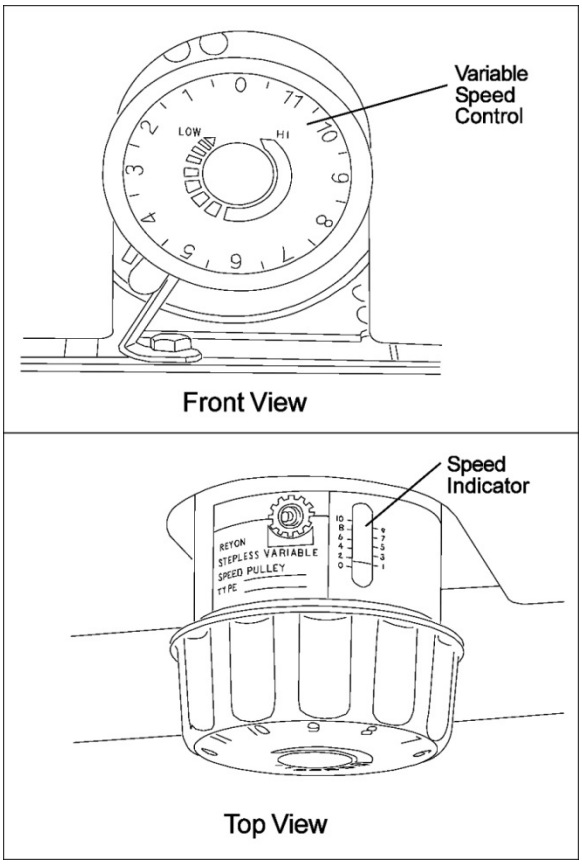

Figure 10: Variable Speed Control

Changing Clutch Position

WARNING: NEVER attempt to shift the clutch mechanism while the saw is running. The saw must be turned off before clutch is shifted.

1. Turn the main switch to off.
2. Pull the door open on the pulley case.
3. Turn the clutch handle clockwise and push in, to engage the high speed pulley drive. Or, turn the clutch handle clockwise, and pull out, to engage the reduction gearbox drive.

   NOTE: When pushing or pulling the clutch knob, the dogs on the clutch mechanism are being engaged. Take the time to make sure the clutch handle is all the way in, or all the

way out, so the clutch dogs are in full engagement when the saw is started.

4. Close the pulley case door.
5. Plug the electrical cord into the power source or close the circuit breaker on the branch circuit.

Changing Drive Belt Position

WARNING: The saw must be turned off and power disconnected before changing drive belt positions.

Refer to Figure 11, below.

1. Unplug the electrical cord or open the circuit breaker in the branch circuit.
2. Open the door on the machine base and the door on the pulley case.
3. Push up on the motor to pivot the motor upward and slacken the drive belt.
4. Move the drive belt to the desired pulley position.

   NOTE: Never force the belts to change pulley location without pivoting the motor to loosen the motor belt. Failure to do so can cause damage to the drive mechanism, and accelerate belt wear and possibly result in belt failure.
5. Release the weight of motor so the motor pivots downward. The weight of the motor will provide adequate belt tension.
6. Plug the electrical cord into the power source or close the circuit breaker on the branch circuit.

NOTE: Keeping both belts installed on the pulleys makes it quicker to switch between wood and metal cutting. If you cut only metal, or only wood, you may wish to remove the other belt.

Changing Pulley-to-Belt Position

WARNING: NEVER attempt to change pulley shaft positions while the saw is running. The saw must be turned off and power disconnected any time pulley shaft positions are being changed.

1. Unplug the electrical cord or open the circuit breaker in the branch circuit.
2. Open the door on the machine base and the door on the pulley case.
3. Push up on the motor to pivot the motor upward and slacken the drive belt.
4. With the motor drive belt loose, remove both pulley drive belts.
5. Both of the pulleys are secured to their shafts with two set screws. These are located in the bottoms of the V-grooves on the pulleys. Using a hex wrench, loosen (but do not remove) all four set screws.
6. Pull the pulleys straight off each shaft.
7. Put the lower pulley on the upper shaft and the upper pulley on the lower shaft.
8. Push the upper pulley firmly against the reduction gearbox and tighten the two setscrews which secure it to the shaft.
9. Using a straight edge against the pulley flanges, make certain the bottom pulley is aligned with the upper pulley. Then tighten the two set screws that secure the lower pulley to the shaft.
10. Install the belts as required (refer to Figure 11).
11. Release the weight of motor so the motor pivots downward. The weight of the motor will provide adequate belt tension.

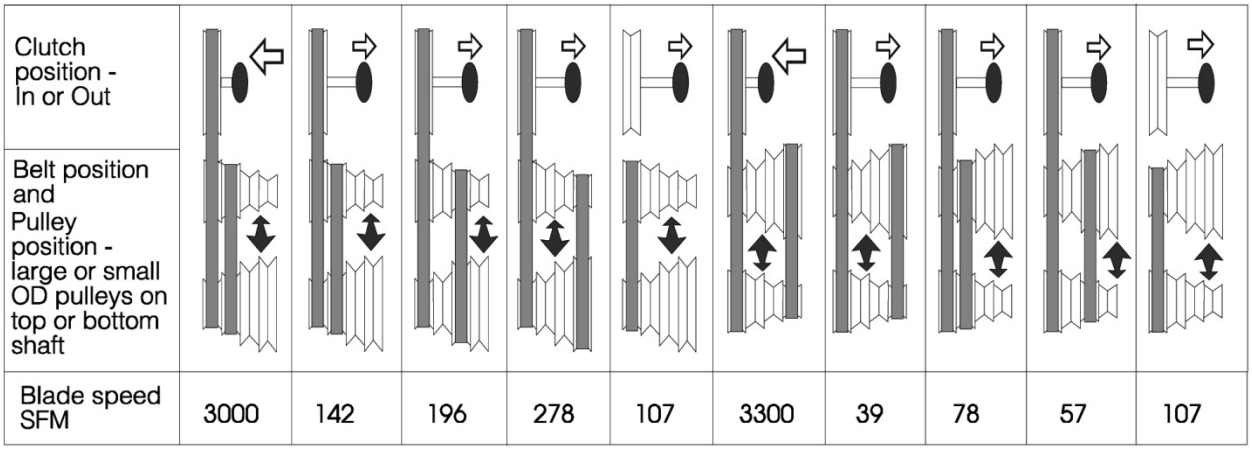

Figure 11: Clutch to Pulley Speed Settings

12. The weight of the motor should provide sufficient tension so the middle of the small drive belt is displaced approximately the thickness of the belt. (The high speed belt is adjusted at the same time as the smaller belt.)
13. Set the drive clutch to the desired position (IN or OUT).
14. Close the access doors.
15. Plug the electrical cord into the power source or close the circuit breaker on the branch circuit.

Using Miter System

A miter gauge is provided with the band saw. The miter gauge slips into a slot in the face of the worktable. The miter gauge can be adjusted from 0 to 45 degrees. Adjust the miter gauge as follows:

1. Loosen the clamping screw on the miter gauge.
2. Adjust to desired angle.
3. Tighten the clamping screw.

Using Rip Fence

1. Unlock the fence by loosening the lock knob and handle.
2. Slide the fence on its guides until it is the required distance from the blade.
3. Tighten the lock knob and handle, slightly.
4. Using a machinist's square, measure the distance between the edge of the miter slot and both the front and rear of the rip fence. Adjust so both distances are equal.
5. Check the fence-to-blade gap, again. Read-just the fence, if necessary, until the blade gap is correct and the fence is parallel with the miter slot.
6. Tighten the fence firmly using the lock knob and handle.

Using the Dust Control Chute

On the lower side of the table, below the cutting position of the blade, is a plastic tube which can be attached to a shop vacuum, or to a shop dust control system. The dust control chute can be seen in several of the figures used to illustrate the operation of the saw.

Maintenance

This section contains periodic maintenance recommendations and maintenance procedures.

Changing Saw Blade

WARNING: The saw must be turned off and power disconnected any time saw blades are being changed.

1. Unplug the electrical cord or open the circuit breaker in the branch circuit.
2. Pull open both upper and lower drive wheel guards (refer to Figure 1).
3. Release blade tension completely by turning the tension handle fully counterclockwise.
4. Remove table leveling pin. The pin has a tight push fit in its slot; it is not threaded. (Refer to Figure 14.
5. Use a screwdriver to pop out the table insert.
6. Loosen the set screws that lock the guide blocks. Move the guide blocks outward. Then turn the micro-adjusting knob to move the blade support bearing to the very rear of its travel.
7. Using a hex wrench, loosen the set screw that locks the lower blade guide and support assembly. Move the assembly to the very rear of its travel by using the micro-adjusting knob on the back side of the assembly (refer to Figure 12).

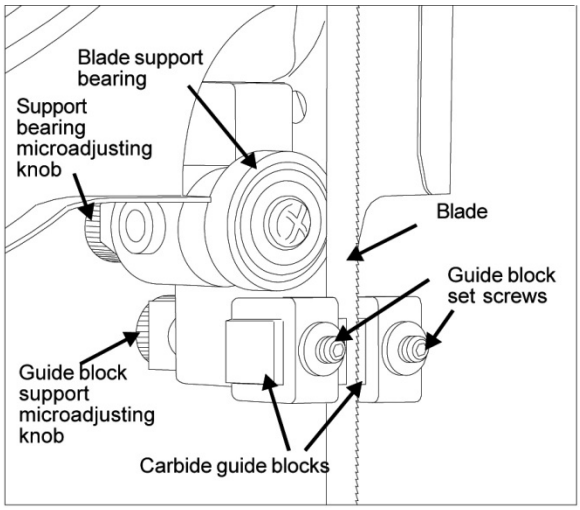

Figure 12: Upper Blade Guides

8. Using a hex wrench, loosen the carbide blade guide set screws. Open up a reasonably large gap between the guides; do this on both the upper and lower blade guides.

9. USING LEATHER GLOVES AND ANSI Z87.1 EYEWEAR TO PROTECT YOURSELF FROM THE CUTTING BLADE, carefully remove the blade from the drive wheels. Remove the blade out of the saw table through the table.

10. Hang the removed blade in a safe place.

    NOTE: Clean out the interior of the saw with a shop vacuum. Examine the bearings and other exposed mechanisms of the saw.

11. Using protective gloves, carefully ease the replacement blade into the table slot and over the upper and lower drive wheels.

    NOTE: It is possible to install the blade upside down. Make sure the teeth on the blade are pointing downward.

    NOTE: The blade should be "free standing" at the cutting throat; the upper and lower blade guides should not touch the blade at any point. Also, make sure the blade is in the slot in the blade guard on the left side of the machine frame. Refer to Figure 1 to identify the blade guard.

12. Apply tension to the blade using the tension knob. The tension levels for various blade widths are shown on the markings on the tension device. Refer to Figure 3 for a view of the tension system.

13. Slowly turn the upper drive wheel by hand, while OBSERVING THE BLADE TRACKING. The blade should track, more or less, in the center of the drive wheel. If the blade does not track true, adjust the tracking to keep the blade centered.

14. Unlock the tilt adjustment knob by loosening its locking wing nut. Both the adjustment knob and wing nut are identified in Figure 8.

15. Turn the tilt adjustment knob (usually a VERY LITTLE at a time) to adjust the tilt of the upper drive wheel. Do this while turning the upper wheel by hand, and adjusting until the blade stays centered on the wheel.

16. Tighten the tilt mechanism locking wing nut.

17. Using the micro-adjusting knob, move the lower blade support assembly (Refer to Figure 13) forward until the support bearing just contacts the back edge of the saw blade.

18. Adjust the lower carbide blade guides until they just contact the sides of the blade. Make sure the guides DO NOT CONTACT THE TOOTH PORTION OF THE BLADE. The guides should touch only the flat part of the blade. After correctly positioning the carbide guide blocks, tighten the set screws securely.

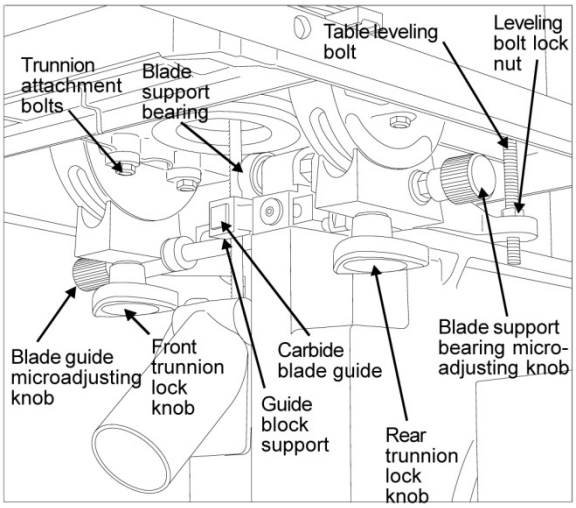

Figure 13: Lower Blade Guide Support – Rear View

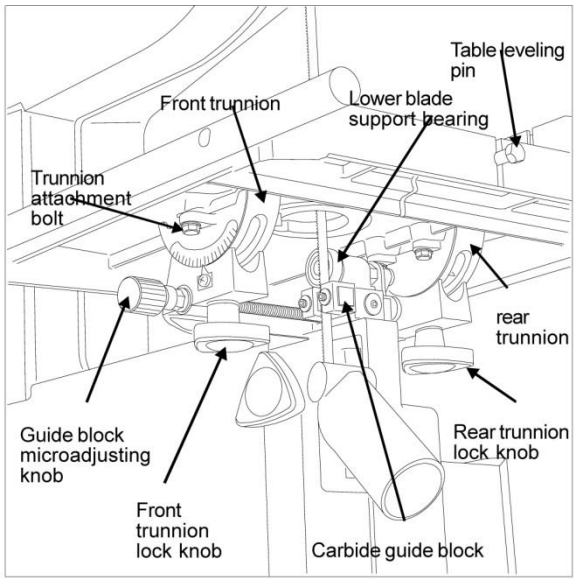

Figure 14: Lower Blade Guide Support – Front View

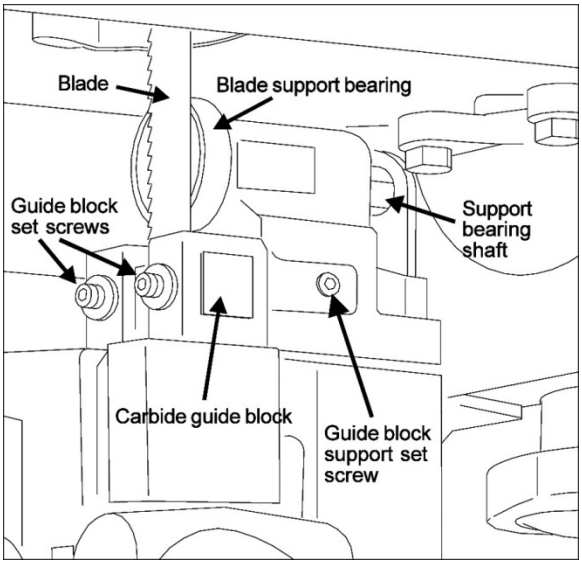

Figure 15: Lower Blade Support Assembly

19. Adjust the upper support assembly so the support bearing just contacts the back edge of the saw blade.
20. Adjust the upper carbide blade guides until they just make contact with the blade BEHIND THE TOOTH AREA OF THE BLADE. Then tighten the set screws securely.
21. Replace the table insert.
22. Insert the table pin into its slot.
23. Close the drive wheel guards.
24. Plug the electrical cord into power source or close the circuit breaker on the branch circuit.
25. Turn on the power and observe the action of the blade to sure the blade is correctly adjusted.

Replacing drive wheel rubber protectors

The rubber rings that cover the drive wheels are called protectors. The protectors protect the wheel from blade damage and provide a high friction drive force on the tensioned blade. Over a long period of service, the protectors wear and may require replacement.

WARNING: The saw must be turned off and power disconnected any time the rubber protectors are being changed.

1. Unplug the electrical cord or open the circuit breaker in the branch circuit.
2. Remove the blade according to the step-by-step instructions on blade replacement.
3. Remove the rubber protectors from the drive wheels. Use a flat screwdriver blade or knife blade to loosen the protectors, being careful not to nick or score the aluminum drive wheels.
4. Clean the surface of the drive wheels. Use a solvent such as mineral spirits as required to achieve a clean, dry surface for the new protectors.
5. Carefully slip the replacement protectors onto the drive wheels.
6. Replace the saw blade and return the saw to service by following the steps in *Changing Saw Blades*
7. Plug the electrical cord into the power source or close the circuit breaker on the branch circuit.

Draining and refilling the reduction gearbox

WARNING: The saw must be turned off and power disconnected any time the gearbox lubricant is being drained or filled.

1. Unplug the electrical cord or open the circuit breaker in the branch circuit.
2. Open the door in the base.
3. Push up on the motor to loosen the drive belts.
4. Remove the pipe plug at the bottom of the gearbox. Drain the oil into a suitable container for safe and appropriate disposal.
5. Replace the drain plug.
6. Open the filler plug.
7. Add lubricant until the level is halfway up the sight gauge window (refer to Figure 16). Use Shell Spirax HD 90 gear lubricant.
8. Replace the filler plug.
9. Replace the drive belts. Allow the motor to pivot downward to apply tension to the belts.
10. Close the access door.
11. Plug the electrical cord into the power source or close the circuit breaker on the branch circuit.

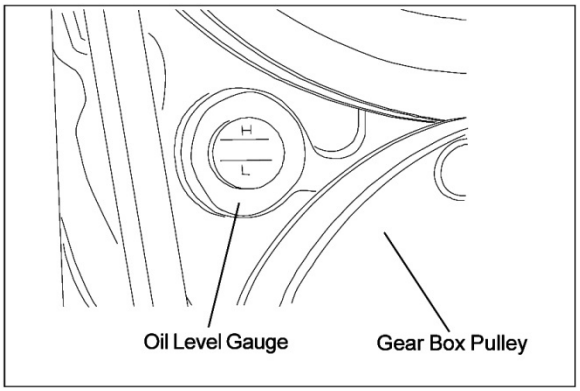

Figure 16: Gearbox Oil Level Gauge

Periodic Maintenance

Refer to the Periodic Maintenance chart for maintenance that should be performed at various time intervals.

Troubleshooting

Refer to the Troubleshooting charts for equipment fault, probable cause and suggested remedy.

Periodic Maintenance

Item	Action	Interval	Maintenance
Saw blade	Listen for sound of missing teeth	Whenever operating saw	Replace blade when teeth are broken
	Observe cutting action for cleanness and accuracy	Whenever operating saw	Replace blade when bent — or worn — Use a wider blade for more accurate straight cuts
	Listen for a poor weld; a "click" as it passes through the guide blocks	When changing blade	Use a different blade or dress the weld with a grinder.
	Watch for signs of slippage on the drive wheels (blade occasionally slows or comes to a stop while sawing)	Whenever sawing	Be sure you are using the correct blade tension — Check drive wheel rubber strips for cleanliness and adherence to drive wheel — replace if necessary
Lower drive wheel	Check bearing area for leakage of lubricant	Monthly	Replace bearing if leakage occurs
Upper drive wheel	Check bearing area for leakage of lubricant	Monthly	Replace bearing if leakage occurs
Drive wheel rubber protectors	Check for cleanliness	Daily and when changing blade	Wipe or brush clean
Drive belts	Check for smooth surfaces and adherence to drive wheel surface	Monthly or when blade slippage occurs	Clean when necessary — replace if damaged or excessively worn
	Check for glazing	Monthly, or when slippage occurs (squealing belt)	Replace a glazed belt — DO NOT USE BELT DRESSING
Reduction gearbox	Check sight glass for level – should be to halfway point on sight glass	Daily	Fill up to half-way point on sight glass with Shell Spirax HD90
		Annually	Drain and refill with Shell Spirax HD90
Blade support bearings	Check for wear, damage or lubricant leakage	Monthly and when changing blade	Replace when necessary
Carbide blade guides	Check for excessive wear	When changing blade	Replace if excessively worn

Troubleshooting the J-8201/8203/8201VS/8203VS

Fault	Probable cause	Suggested remedy
Excessive blade breakage	1. Material loose in vise.	1. Clamp work securely.
	2. Incorrect speed or feed.	2. Refer to Figure 7 or check Machinist's Handbook for speed/feed appropriate for the material being cut.
	3. Teeth too coarse for material.	3. Check Machinist's Handbook for recommended blade type.
	4. Incorrect blade tension.	4. Adjust blade tension to the point where the blade just does not slip on the wheel.
	5. Saw blade contacts workpiece before the saw is started.	5. Start the motor before placing the saw on the workpiece.
	6. Blade rubs on the wheel flange.	6. Adjust blade tracking.
	7. Misaligned guides.	7. Adjust guides.
	8. Cracking at weld.	8. Longer annealing cycle.
Premature blade dulling	1. Blade teeth too coarse.	1. Use a finer tooth blade.
	2. Blade speed too high.	2. Try a lower blade speed.
	3. Hard spots in workpiece or scale on/in workpiece.	3. Increase feed pressure (hard spots). Reduce speed, increase feed pressure (scale).
	4. Work hardening of material (especially stainless steel).	4. Increase feed pressure by reducing spring tension.
	5. Insufficient blade tension.	5. Increase tension to proper level.
	6. Operating saw without pressure on workpiece.	6. Do not run blade at idle in/on material.
Bad cuts (out-of-square)	1. Feed pressure too fast.	1. Decrease pressure.
	2. Guide bearings not adjusted properly.	2. Adjust guide bearing clearance to 0.001 inch (0.002 inch maximum).
	3. Inadequate blade tension.	3. Gradually increase blade tension.
	4. Dull blade.	4. Replace blade.
	5. Incorrect blade speed.	5. Check blade speed (see Figure 7).
	6. Blade guide assembly is loose.	6. Tighten blade guide assembly.
	7. Blade guide bearing assembly loose.	7. Tighten blade guide bearing assembly.
	8. Blade track too far away from wheel flanges.	8. Adjust blade tracking.
	9. Guide bearing worn.	9. Replace worn bearing.
Bad cuts (rough)	1. Blade speed too high for feed pressure.	1. Reduce blade speed and feed pressure.
	2. Blade is too coarse.	2. Replace with finer blade.

Fault	Probable cause	Suggested remedy
Blade is twisting	1. Blade is binding in the cut.	1. Decrease feed pressure.
	2. Blade tension too high.	2. Decrease tension on blade
Unusual wear onside/back of blade	1. Blade guides worn	1. Replace blade guides.
	2. Blade guide bearings not adjusted.	2. Adjust blade guide bearings.
	3. Blade guide bearing bracket is loose.	3. Tighten blade guide bearing bracket.
Teeth missing/ripped from blade	1. Blade tooth pitch too coarse for workpiece.	1. Use blade with finer tooth pitch.
	2. Feed too slow; feed too fast.	2. Increase feed pressure and/or blade speed.
	3. Workpiece vibrating.	3. Clamp workpiece securely.
	4. Gullets loading up with chips.	4a.Use blade with a coarse tooth pitch—reduce feed pressure. 4b.Brush blade to remove chips.
Motor running too hot	1. Blade tension too high.	1. Reduce tension on blade.
	2. Drive belt tension too high.	2. Reduce tension on drive belt.
	3. Blade too coarse for workpiece	3. Use blade with fine tooth pitch.
	4. Blade too fine for workpiece	4. Use blade with coarse tooth pitch.
	5. Speed reducer requires lubrication	5. Check speed reducer.
Excessive speed reducer noise/ vibration	1. V-belt is too tight.	1. Reset V-belt tension.

Replacement Parts

Replacement parts are listed on the following pages. To order parts or reach our service department, call 1-800-274-6848 Monday through Friday (see our website for business hours, www.jettools.com). Having the Model Number and Serial Number of your machine available when you call will allow us to serve you quickly and accurately

Exploded View and Parts List – Base – Models J-8201 and J-8203

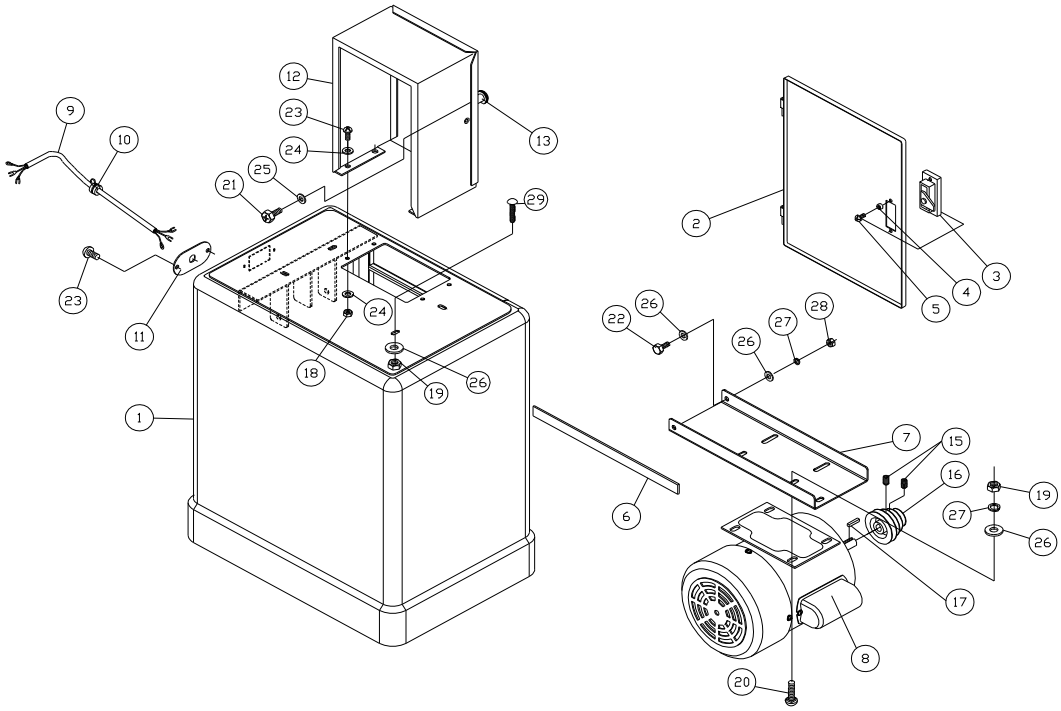

Index No	Part No	Description	Size	Qty
1	J-5513834G	Closed Stand		1
	J-5507565G	Closed Stand Assembly w/o Motor		1
2	J-5513835G	Door		1
3	5513836	Lock		1
4	5513837	Washer		1
5	5513838	Pan Head Bolt	M4x5	2
	5513858	Lock Assembly (includes #3,4 and 5)		1
6	5513839	Pad		2
7	J-5513861G	Motor Bracket		1
8	J-5784391	Motor	115/230V, 1Ph	1
	J-5784411	Motor	230/460V, 3Ph	1
9	IM148004	Motor Cord	1Ph	1
	IM148005	Motor Cord	3Ph 600V	1
10	5513842	Strain Relief	6N-4,1PH	2
	998630	Strain Relief	7P-2,3PH	2
11	5784281	Strain Relief Plate	1PH	1
	612156	Strain Relief Plate	3PH	1
12	J-5513845G	Pulley Cover		1
13	5513846	Knob		1
15	TS-1523011	Set Screw	M6x6	2
16	5784682	Pulley		1
17	5513859	Key	5x5x40	1
18	TS-1540031	Hex Nut	M5	4
19	TS-2311081	Hex Nut	M8	5
20	5513849	Carriage Bolt	M8x16	4
21	5784331	Hex Head Bolt	M6x12	1
22	TS-1490041	Hex Head Bolt	M8x25	2
23	5782761	Pan Head Bolt	M5x12	6
24	TS-1550031	Flat Washer	M5	8
25	5511747	Flat Washer	M6	1
26	TS-1550061	Flat Washer	M8	9
27	5511752	Lock Washer	M8	6
28	TS-1541031	Nylon Nut	M8	2
29	5784683	Carriage Bolt	M8x50	1

Exploded View and Parts List – Base – Models J-8201VS and J-8203VS

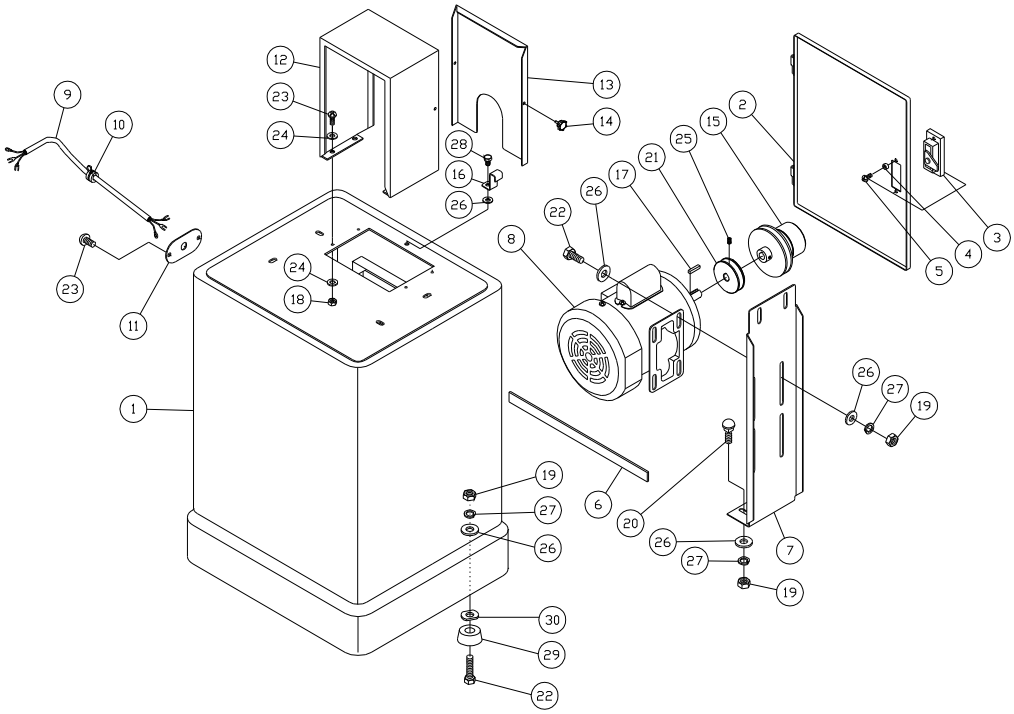

Index No	Part No	Description	Size	Qty
1	J-5513860G	Closed Stand		1
2	J-5513835G	Door		1
3	5513836	Lock		1
4	5513837	Washer		1
	5513858	Lock Assembly (include #3, 4 and 5)		1
5	5513838	Pan Head Bolt	M4x5	2
6	5513839	Pad		2
7	J-5784684G	Motor Bracket		1
8	J-5784391	Motor	115/230V,1Ph	1
	J-5784411	Motor	230/460V,3Ph	1
9	IM148004	Motor Cord	1Ph	1
	IM148005	Motor Cord	3Ph 600V	1
10	5513842	Strain Relief	6N-4 1PH	2
	998630	Strain Relief	7P-2 3PH	2
11	5784281	Strain Relief Plate	1PH	1
	5784281	Strain Relief Plate	3PH	1
12	J-5784685G	Doorframe		1
13	J-5784686G	Cover		1
14	5784687	Knob	M5x12	2
15	5784688	Motor VS Pulley		1
16	5784689	Locate Plate		1
17	5513859	Key	5x5x40	1
18	TS-1540031	Hex Nut	M5	4
19	TS-2311081	Hex Nut	M8	12
20	5513849	Carriage Bolt	M8x16	4
21	5784690	Motor Pulley		1
22	TS-1490041	Hex Cap Screw	M8x25	8
23	5782761	Pan Head Bolt	M5x12	6
24	TS-1550031	Flat Washer	M5	8
25	TS-1523031	Set Screw	M6x10	2
26	TS-1550061	Flat Washer	M8	16
27	5511752	Lock Washer	M8	12
28	TS-1490021	Hex Cap Screw	M8x16	1
29	5784692	Rubber Foot		4
30	5784693	Special Washer		4

Exploded View – Saw Head – Models J-8201,J-8203,J-8201VS and J-8203VS

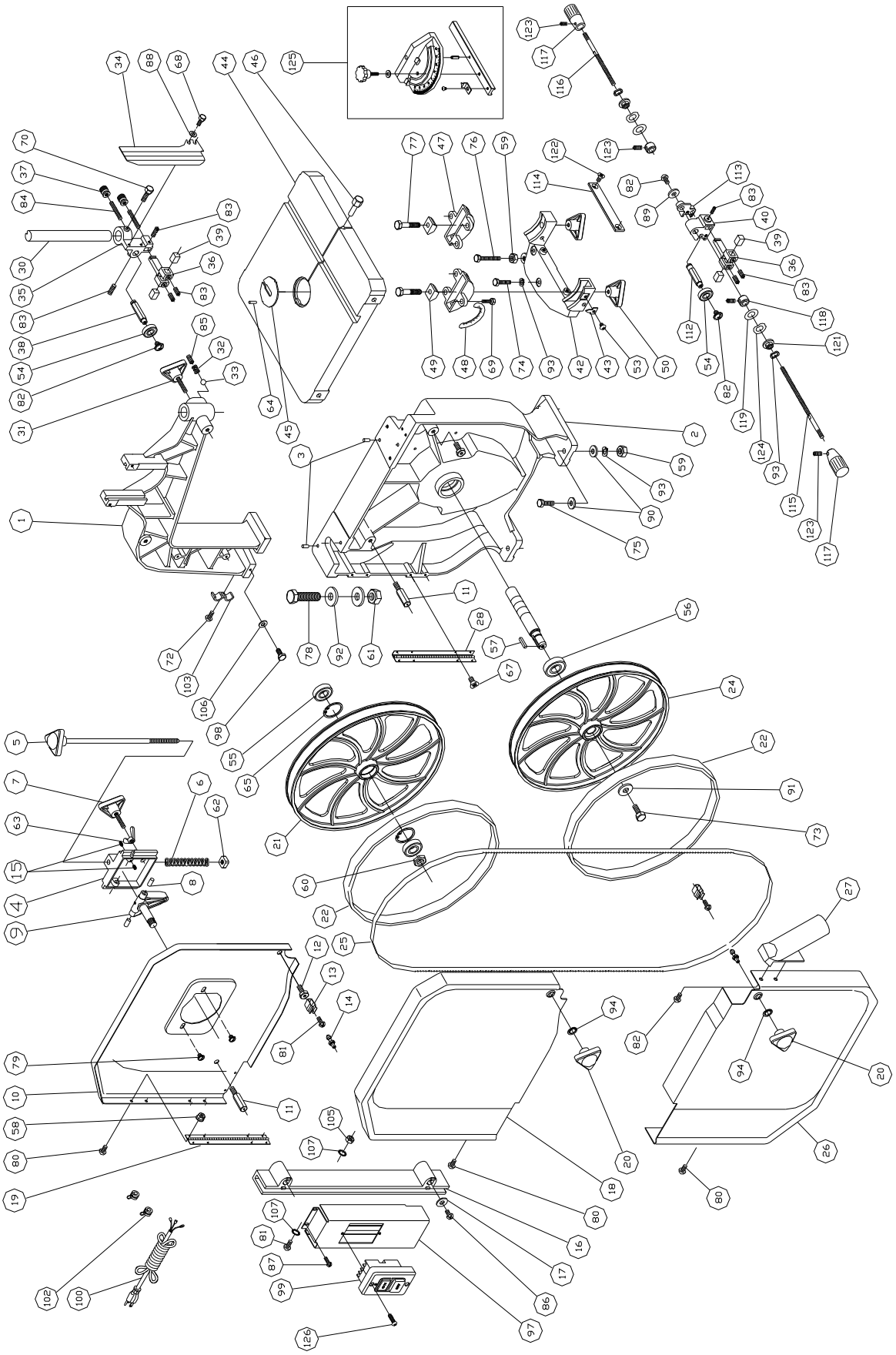

Parts List – Saw Head – Models J-8201,J-8203,J-8201VS and J-8203VS

Index No	Part No	Description	Size	Qty
1	J-5782511G	Upper Arm, Frame		1
2	J-5873041G	Base		1
3	5783241	Dowel Pin		4
4	5782521	Upper Wheel Sliding Bracket		1
5	5782591	Blade Tension Adjustment Knob		1
6	5782611	Tension Spring		1
7	5782571	Blade Track Adjustment Knob	M8x55	1
8	5782541	Pivot Pin		2
9	5782531	Upper Wheel Hinge w/ Shaft		1
10	J-5782631G	Inner Upper Wheel Guard		1
11	5782821	Stud		2
12	5782741	Fixed Bolt		2
13	5782751	Catch		2
14	170080	Stud Latch		2
15	TS-1522021	Set Screw	M5x8	2
16	5782831	Blade Guard		1
17	5782841	Retainer		2
18	J-5782891G	Outer Upper Wheel Guard		1
19	5782861	Hinge (Upper)		1
20	5782921	Knob	M8	2
21	5782661	Upper Wheel		1
22	5782691	Wheel Protector		2
24	5783161	Lower Wheel		1
25	141020	Saw Blade for Metal Cutting	93-1/2” x 14T/in	1
	170368	Saw Blade for Wood Cutting	93-1/2” x 6T/in.	1
26	J-5783111G	Lower Wheel Guard		1
27	5783121	Dust Chute		1
28	5783081	Hinge (Lower)		1
30	5783351	Guide Post		1
31	5783281	Knob	M10x30	1
32	5783261	Spring		1
33	SB-8MM	Steel Ball	8mm	1
34	5783421	Upper Wheel Blade Guard		1
35	5783341	Upper Support Bracket Post		1
36	5783411	Support Bracket		2
37	5783371	Micro Adjustment Nut		2
38	5783321	Upper Spacing Sleeve		2
39	5783391	Carbide Blade Guide		4
40	5783631	Lower Support Bracket Post		1
42	5783591	Bracket Trunnion Support		1
43	5783611	Point		1
44	J-5783451G	Table		1
45	5783471	Table Insert		1
46	5783481	Table Pin		1
47	5783521	Trunnion		2
48	5783531	Scale		1
49	5783491	Trunnion Clamp Shoe		2
50	5783621	Knob	M10	2
53	5782641	Pan Head Screw	M5x6	1
54	5783311	Bearing	6200ZZ	2
55	BB-6202ZZ	Bearing	6202Z	2
56	5783171	Bearing	6204LLU	1
57	5783211	Key	5x5x20	2
58	5782881	Flange Nut	M5	12
59	5783581	Hex Nut	M8	5
60	5625361	Hex Nut	M12	1
61	5783071	Hex Nut	M16	1
62	5782621	Square Nut		1
63	5782581	Wing Nut	M8	1
64	5783461	Roll Pin	3x8	1

Index No	Part No	Description	Size	Qty
65	5782681	Retaining Ring	R35	2
67	5783091	Flat Head Screw	M5x10	4
68	5625121	Hex Cap Screw	M6x10	2
69	TS-1482021	Hex Cap Screw	M6x12	6
70	TS-1482041	Hex Cap Screw	M6x20	1
72	5782761	Pan Head Screw	M5x8	1
73	5783141	Hex Cap Bolt (Left Hand)	M8x20	1
74	TS-1490051	Hex Cap Screw	M8x30	2
75	TS-1490071	Hex Cap Bolt	M8x40	4
76	5783551	Hex Cap Screw	M8x80	1
77	TS-1491081	Hex Cap Bolt	M10x50	2
78	5783051	Hex Cap Bolt	M16x55	1
79	5782641	Pan Head Screw	M5x6	2
80	5782871	Pan Head Screw	M5x8	12
81	5782961	Pan Head Screw	M5x25	3
82	5783131	Pan Head Screw	M6x8	4
83	5783331	Set Screw	M6x10	7
84	5783361	Micro Adjustment Screw	M8x35	2
85	5783271	Set Screw	M10x10	1
86	6286667	Self Tapping Screw	M3.5x16	2
87	5782941	Self Tapping Screw	M4x8	2
88	TS-1550041	Flat Washer	M6	2
89	TS-1550041	Flat Washer	M6	1
90	5783231	Flat Washer	M8	8
91	5511747	Flat Washer	M8	1
92	5783061	Flat Washer	M16	2
93	5511752	Lock Washer	M8	8
94	5511752	Lock Washer	M8	2
97	J-5782931G	Switch Bracket	1PH	1
	141039	Switch Bracket	3PH	1
98	TS-1482021	Hex Cap Screw	M6x12	1
99	5782951	Switch	1Ph	1
	994507	Switch	3Ph 480V	1
100	5782981	Power Cord	115/230V, 1Ph	1
	IC148005	Power Cord	230/460V, 3Ph,600V	1
102	5782971	Strain Relief	6N-4, 1PH	2
	998630	Strain Relief	7P-2, 3PH	2
103	5783021	Wire Clip		1
105	5782881	Flange Nut	M5	4
106	5783431	Flat Washer	M6x13x1	1
107	AFS400-23	Lock Washer, External Tooth	M5	2
112	5783671	Spacing Sleeve		1
113	5783641	Adjusting Block		1
114	5783651	Guide Plate		1
115	5783731	Adjusting Bar		1
116	5783711	Adjusting Bar		1
117	5783721	Handle		2
118	5783681	Setting Bushing		2
119	5783771	Spacer		2
121	5783751	Flange Nut	M8	2
122	TS-1514021	Flat Head Socket Screw	M6x15	2
123	5640181	Set Screw	M5x5	4
124	5783761	Wave Washer	8x13	2
125	5784695	Miter Gauge Assembly		1
126	5517184	Pan Head Screw	M4x25	2
	JET-138	JET Logo (not shown)	138 x 57mm	1

Exploded View – Gearbox – Models J-8201 and J-8203

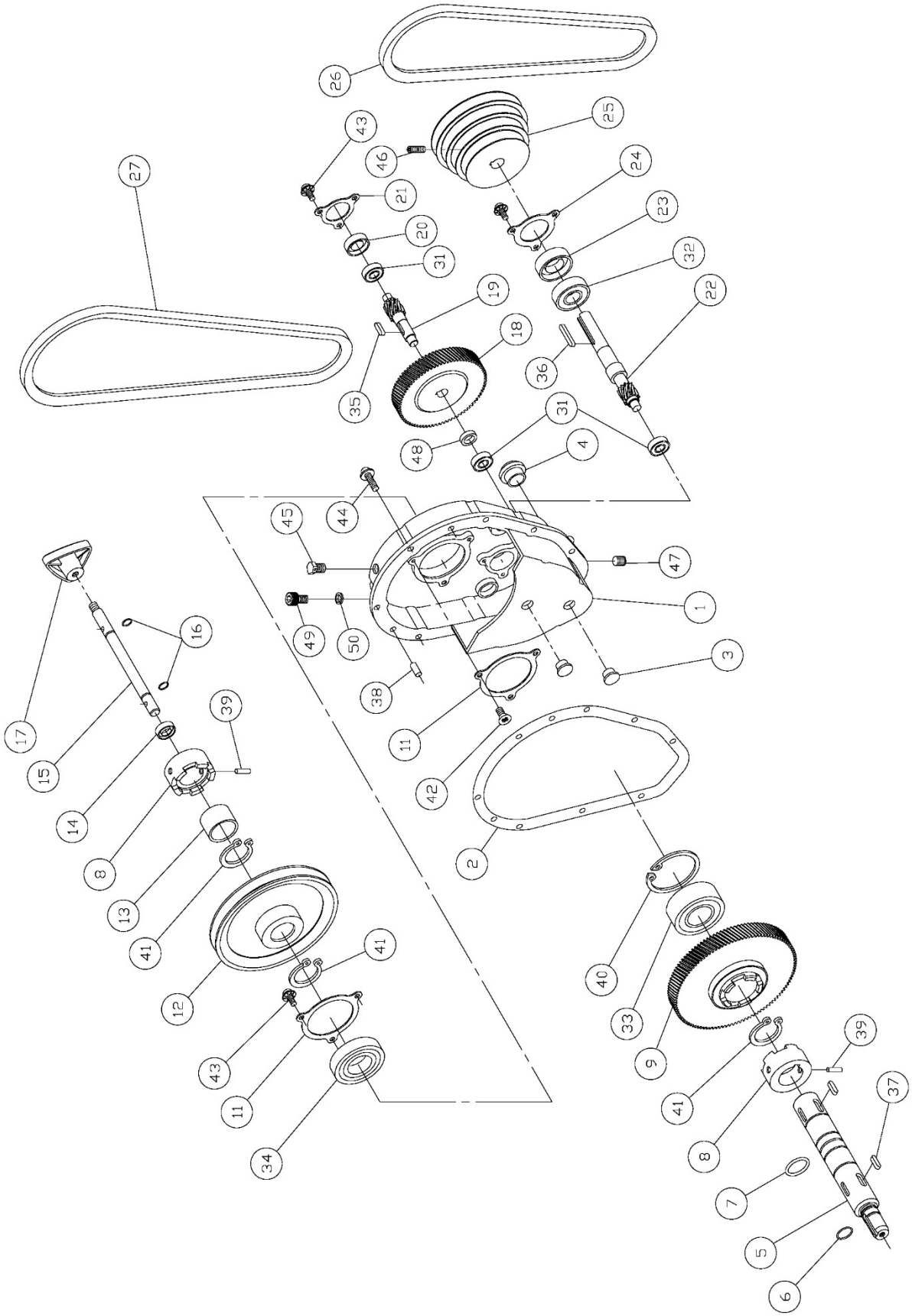

Parts List – Gearbox – Models J-8201 and J-8203

Index No	Part No	Description	Size	Qty
	J8201-GBG	Gearbox Complete (includes all items below, except #26 and 27)		
1	J-5783831G	Housing Gearbox		1
2	5513791	Packing		1
3	5783861	Plug		2
4	5783911	Oil Level Glass		1
5	5783181	Shaft		1
6	5784696	O-Ring	P15	1
7	5784697	O-Ring	P24	1
8	5784061	Clutch Dog		2
9	5783921	Gear		1
11	5513800	Bearing Cover		2
12	5784111	Pulley		1
13	5784121	Bushing		1
14	5784051	Oil Seal		1
15	5784081	Clutch Shaft		1
16	5513805	O-Ring	P9	2
17	5784091	Knob		1
18	5783981	Gear		1
19	5783951	Shaft (with gear)		1
20	5783871	Oil Seal	30x7	1
21	5784141	Bearing Cover		1
22	5783991	Shaft (with gear)		1
23	5783881	Oil Seal	17x40x7	1
24	5784151	Bearing Cover		1
25	5784181	Gear Box Pulley		1
26	5784221	V-Belt	A34	1
27	5784211	V-Belt	A51	1
31	9100441	Ball Bearing	6200LLU	3
32	5783851	Ball Bearing	6203LLU	1
33	5783931	Ball Bearing	3206ZZ	1
34	5629151	Ball Bearing	6206LLU	1
35	5783961	Key	5x5x18	1
36	5784011	Key	5x5x40	1
37	5784031	Key	7x7x20	2
38	5513824	Parallel Pin	5x20	2
39	5784071	Roll Pin	5x30	2
40	5783941	Internal Snap Pin	R62	1
41	5784041	Retaining Ring	S30	3
42	5513828	Countersunk Head Bolt	M5x10	3
43	5511817	Pan Head Screw	M5x8	9
44	5784171	Pan Head Screw	M6x16	8
45	5784698	Hex Cap Screw w/ Air Drain	M8x12	1
46	5783331	Set Screw	M6x10	2
47	5513833	Drain Plug	1/8x28PT	1
48	5784699	Bushing		1
49	5513831	Socket Head Cap Screw	M10x8	1
50	5513805	O-Ring	P9	1
51	144016	Spacer		1

Exploded View – Gearbox – Models J-8201VS and J-8203VS

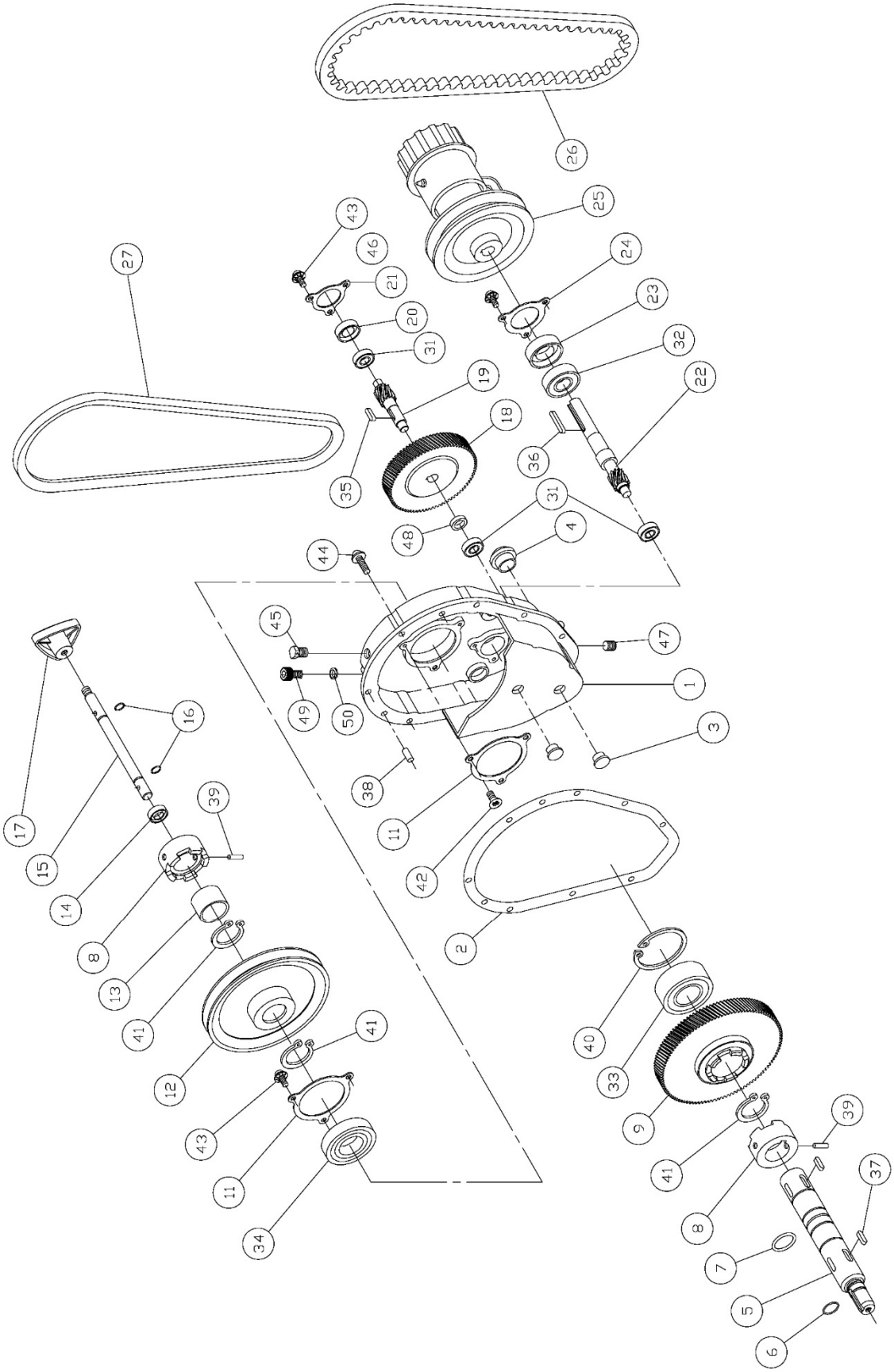

Parts List – Gearbox – Models J-8201VS and J-8203VS

Index No	Part No	Description	Size	Qty
1	5313790G	Housing Gearbox		1
2	5513791	Packing		1
3	5783861	Plug		2
4	5783911	Oil Level Glass		1
5	5783181	Shaft		1
6	5784700	O-Ring	P15	1
7	5784701	O-Ring	P24	1
8	5513797	Clutch Dog		2
9	5513798	Gear (O)		1
11	5513800	Bearing Cover (O)		2
12	5513801	Pulley		1
13	5784121	Bushing		1
14	5784051	Oil Seal	12x22x7	1
15	5513804	Clutch Shaft		1
16	5513805	O-Ring	P9	2
17	5784091	Knob	M10	1
18	5513807	Helical Gear (M)		1
19	5783951	Gear Shaft (M)		1
20	5783871	Oil Seal	30x7	1
21	5784141	Bearing Cover (M)		1
22	5513811	Shaft (with gear) (I)		1
23	5783881	Oil Seal	17x40x7	1
24	5784151	Bearing Cover (I)		1
25	5513814	Non-Step Speed Changer (Set)		1
26	5513815	Synchronous Belt (V-Type)	17x890L	1
27	5513816	V-Belt	A51	1
31	9100441	Ball Bearing	6200LLU	3
32	5783851	Ball Bearing	6203LLU	1
33	5783931	Ball Bearing	3206ZZ	1
34	5629151	Ball Bearing	6206LLU	1
35	5783961	Key	5x5x18	1
36	5784011	Key	5x5x40	1
37	5784031	Key	7x7x20	2
38	5513824	Parallel Pin	5x20	2
39	5784071	Roll Pin	5x30	2
40	5783941	Retaining Ring	R62	1
41	5784041	Stop Ring	S30	3
42	5513828	Countersunk Head Bolt	M5x10	3
43	5511817	Pan Head Screw	M5x8	9
44	TS-1534052	Pan Head Screw	M6x16	8
45	5784702	Hex Cap Screw w/ Air Drain	M8x12	1
46	5783331	Set Screw	M6x10	2
47	5513833	Drain Plug	1/8x28PT	1
48	5784703	Bushing		1
49	5513831	Socket Head Cap Screw	M10x8	1
50	5513805	O-Ring	P9	1
51	144016	Spacer		1

Exploded View and Parts List – 5782181 Optional Riser Block – All Models

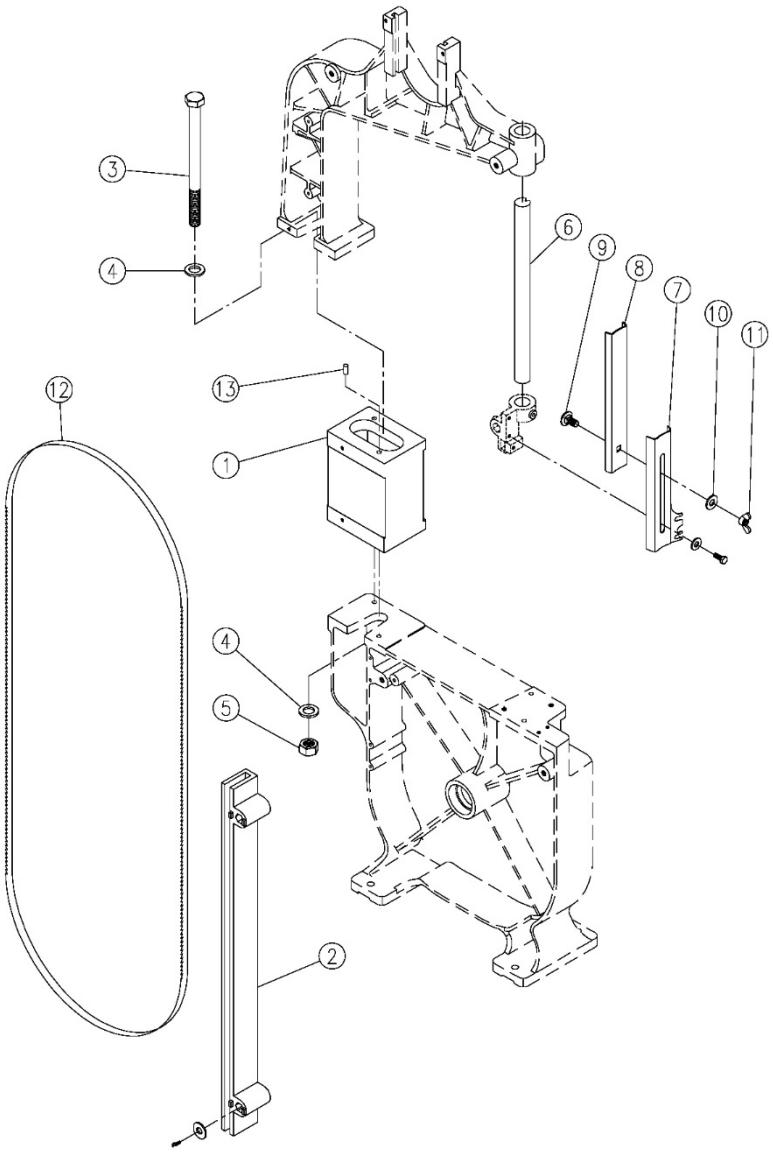

Index No	Part No	Description	Size	Qty
	5782181G	Riser Block Assembly (includes all items below)		
1	J-5784511G	Riser Block		1
2	5784521G	Blade Guard		1
3	5784551	Hex Head Screw	5/8x8-1/2	1
4	5784561	Flat Washer	5/16	1
5	5784571	Hex Nut	5/8	1
6	5784581	Guide Post		1
7	5784591	Upper Wheel Blade Guard		1
8	5784611	Blade Guard Extender		1
9	5784621	Carriage Bolt	M8x16	1
10	5511747	Flat Washer	M8	1
11	5782581	Wing Nut	M8	1
12	5784641	Saw Blade (Metal Cutting)	105"x3/8"x14T/in	1
.	5784681	Saw Blade (Wood Cutting)	105"x3/8"x6T/in	1
13	5784651	Pin		2

Rip Fence Assembly (Optional Equipment)

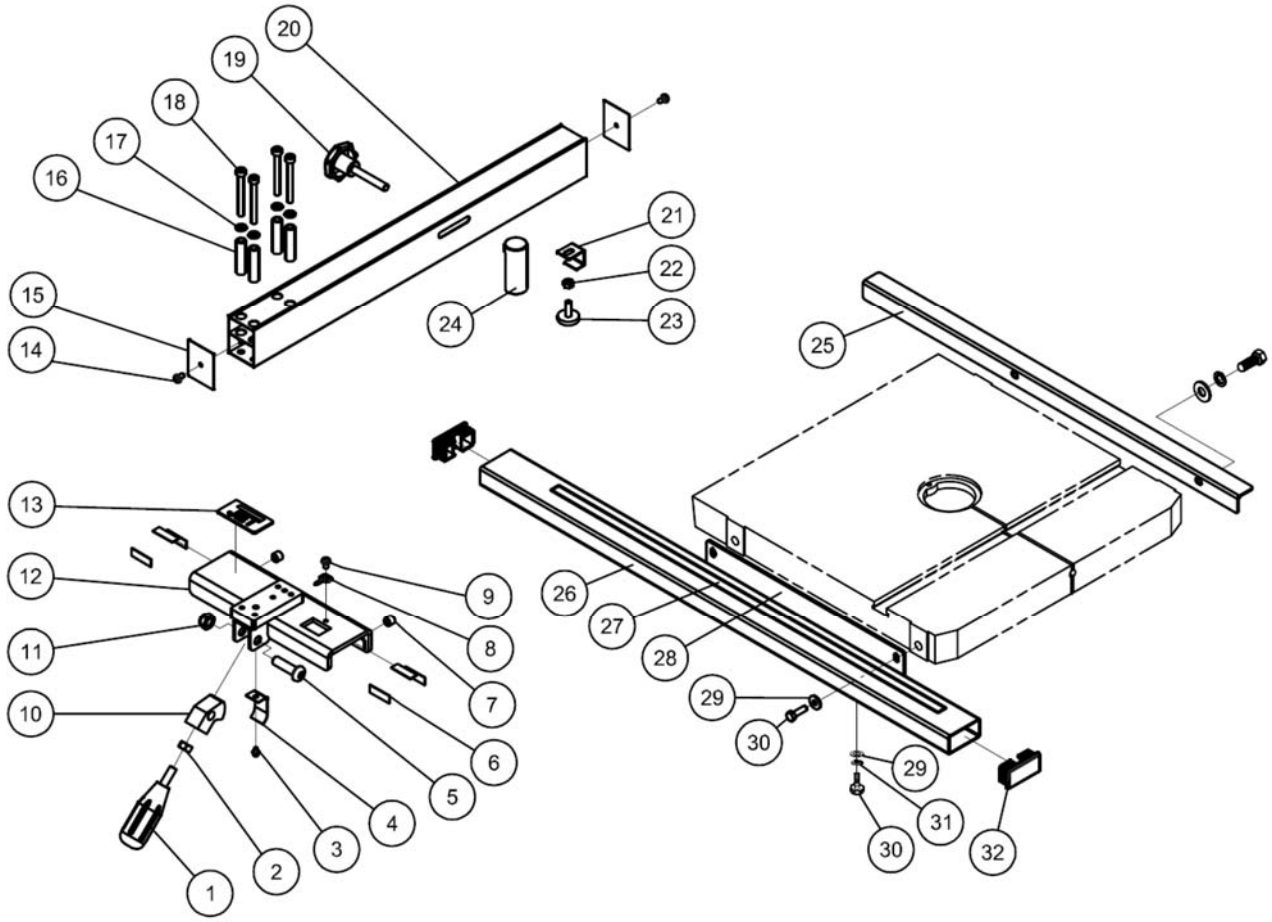

Parts List – Rip Fence Assembly (Optional Equipment)

Index No	Part No	Description	Size	Qty
1	198013	Lock Handle*		1
2	TS-1540061	Hex Nut*	M8	1
3	SG049100	Flanged Hex Cap Screw	M4*6*0.8	1
4	198006	Leaf Spring		1
5	TS-2249402	Socket Head Button Screw	M10*40	1
6	136470-1	Wear Pad	10x28x1 mm	6
7	SS100250	Nylon Set Screw	M10-1.5x10	2
8	198059	Pointer		1
9	TS-2285502	Pan Head Phillips Screw	M5x5	1
10	198004	Fixed Block		1
11	F001755	Lock Nut (Black)	M10	1
12	198140	Fence Body		1
13	JWBS14-F01	JET Plaque	1-3/16 x 2-1/4”	1
14	F011270	Pan Hd Phillips Tap Screw (Black)	#6-20x1/2”	2
15	198015	Fence Cover		2
16	198010	Spacer Bushing	Ø6.5x42.5 mm	4
17	TS-2361061	Spring Washer	M6	4
18	TS-1503121	Socket Head Cap Screw	M6x55L	4
19	100152	Screw Knob		1
20	198144	Aluminum Extrusion Fence	490L x 50H mm	1
21	198142	Rear Hook		1
22	TS-2311061	Hex Nut	M6	1
23	198012	Adjust Screw	M6x20	1
24	198092	Resaw Post*		1
25	8201-27G	Rear Rail		1
26	8201-24G	Guide Rail		1
27	JWBS14-F23	Scale Label	(inches)	1
28	8201-25G	Front Rail		1
29	TS-1550041	Flat Washer*	M6xØ13	7
30	TS-1482041	Hex Cap Screw*	M6x20	7
31	TS-0720071	Lock Washer*	1/4"	5
32	2013-285	End Cap	25x50 mm	2
	JWBS14-HKN	Hardware Package (includes items marked with *)		1

Electrical Connections

Single Phase

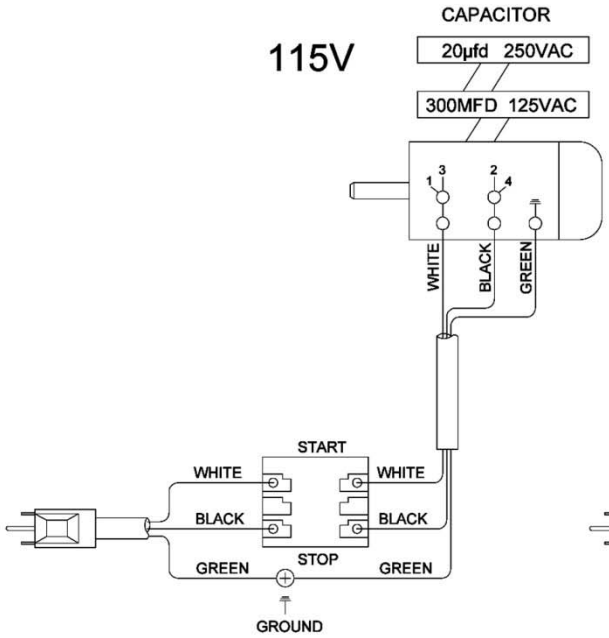

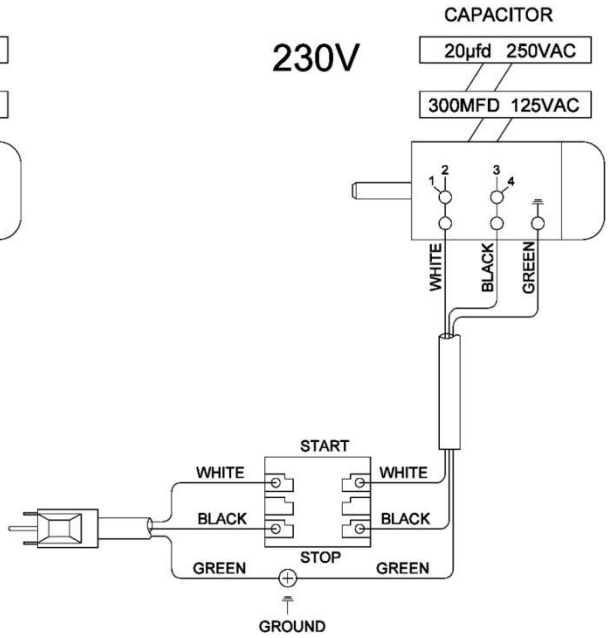

Three Phase

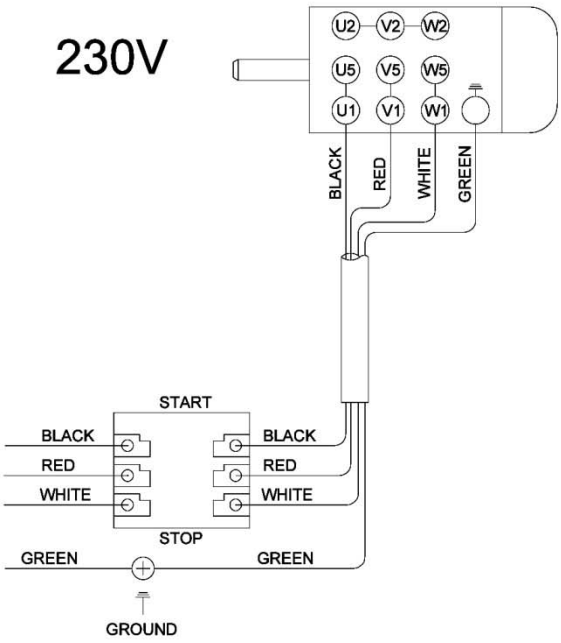

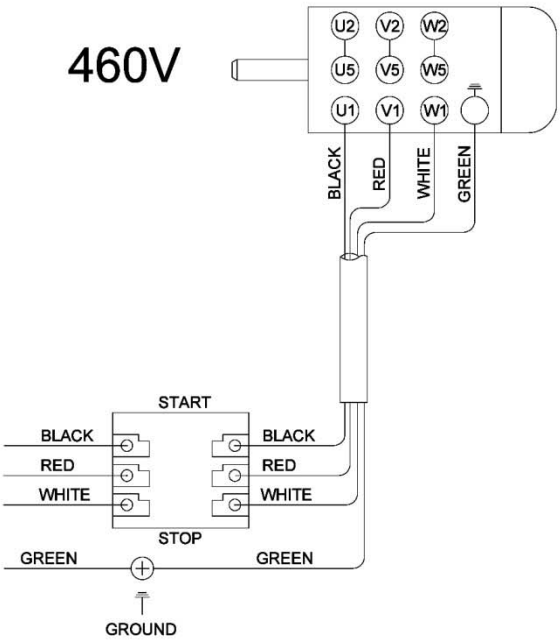

427 New Sanford Road
LaVergne, Tennessee 37086
Phone: 800-274-6848
www.jettools.com