PART'S MANUAL

Metal Working

Book 2 of 2

VARIABLE SPEED VERTICAL BAND SAW

MODEL: BSV-24VS

Baileigh Industrial Holdings LLC
P.O. Box 531
Manitowoc, WI 54221-0531
Phone: 920.684.4990
Fax: 920.684.3944
sales@baileigh.com

REPRODUCTION OF THIS MANUAL IN ANY FORM WITHOUT WRITTEN APPROVAL OF BAILEIGH INDUSTRIAL HOLDINGS LLC IS PROHIBITED. Baileigh Industrial Holdings LLC, Inc. does not assume and hereby disclaims any liability for any damage or loss caused by an omission or error in this Operator's Manual, resulting from accident, negligence, or other occurrence.

Rev. 01/2020

© 2020 Baileigh Industrial Holdings LLC

Table of Contents

FREE WHEEL ASSEMBLY 1
Free Wheel Assembly List 2
POST AND UPPER SAWGUIDE ASSEMBLY 3
Post and Upper Saw Guide Assembly List 4
TABLE AND UNDER SAW GUIDE ASSEMBLY 5
Table and Under Saw Guide Assembly List 6
DRIVE ASSEMBLY 7
Drive Assembly List 8
VARIABLE SPEED PULLEY ASSEMBLY 9
Variable Speed Pulley Assembly List 10
TRANSMISSION ASSEMBLY 12
Transmission Assembly List 13
SPEED RANGE GEARSHIFT ASSEMBLY 15
Speed Range Gearshift Assembly List 16
IDLE WHEEL ASSEMBLY 17
Idle Wheel Assembly List 17
WELDER ASSEMBLY 18
Welder Assembly List 19
MACHINE BODY ASSEMBLY 21
Machine Body Assembly List 22

FREE WHEEL ASSEMBLY

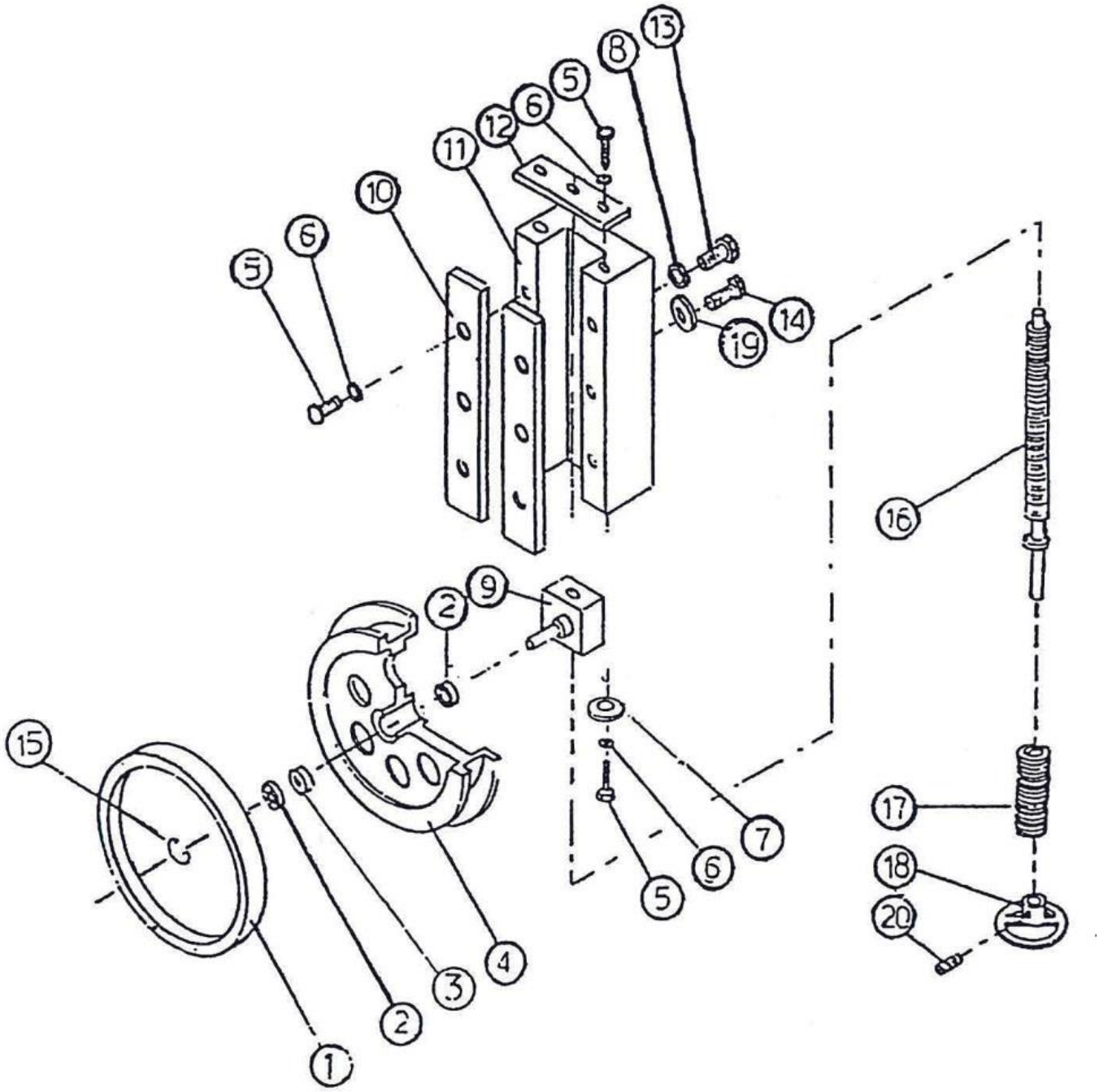

Free Wheel Assembly List

Item	Parts No.	Description	Qty.
1		KV-60 Rubber Tire	1
2		Bearing 6205ZZ	2
3	V-40303	Spacer	1
4	V-40301	Free Wheel	1
5		Hex. Hd. Screw M8 x 1.25 x 20	9
6		Spring Washer 3/8"	9
7		Washer 7/16"	1
8		Nut M8 x 1.25	4
9	V-40305	Sliding Block	1
10	B-36312	Plate	2
11	B-36305	Sliding Block Guide	1
12	B-36311	Plate	2
13		Soc. Hd. Screw M8 x 1.25 x 30	4
14		Hex. Hd. Screw M8 x 30	4
15		C-Snap Ring RW-52	1
16	V-40306	Tension Screw	1
17	V-40307	Spring	1
18	B-36308	Handle	1
19	B-36313	Sliding Block Guide Washer	4
20		Lock Screw M8 x 1.25 x 10	1

POST AND UPPER SAWGUIDE ASSEMBLY

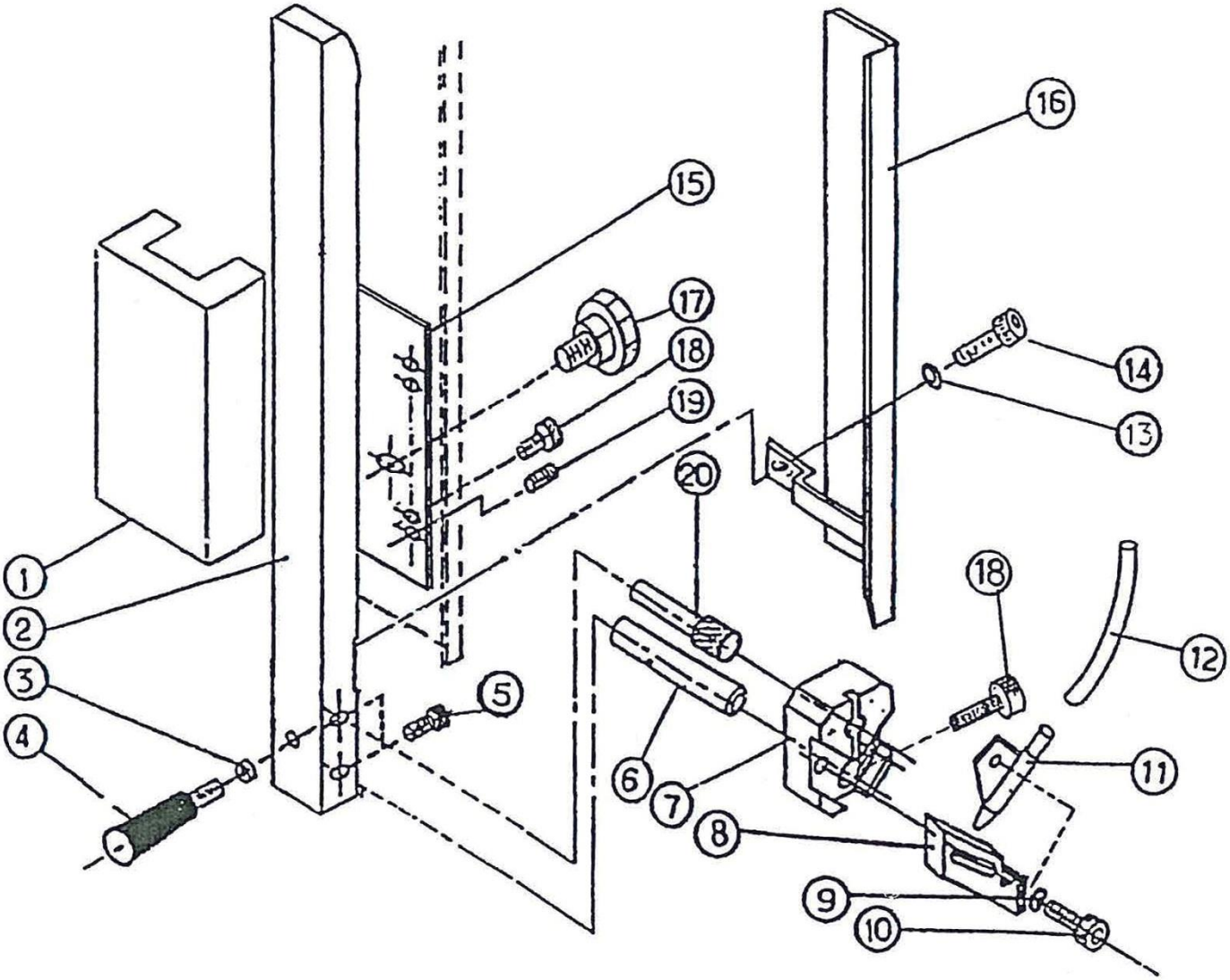

Post and Upper Saw Guide Assembly List

Item	Parts No.	Description	Qty.
1	V-40202	Post Guide	1
2	V-40201	Post	1
3		Spring Washer 3/8"	1
4		Handle	1
5		Soc. Hd. Screw M6 x 15	2
6	V-40207	Back Up Support	1
7	V-40204	Upper Insert Holder	1
8	V-40206	Insert	2
9		Spring Washer 1/4”	2
10		Soc. Hd. Screw M6 x 30	2
11		Nozzle	1
12		Hose	1
13		Washer 1/4"	2
14		Soc. Hd. Screw M6 x 1.5	2
15	V-40203	Post Guide Washer	1
16	V-40209	Protector Cover	1
17		Handle	1
18		Soc. Hd. Screw M6 x 30	4
19		Lock Screw M8 x 15	4
20	V-40208	Support Bar	1

TABLE AND UNDER SAW GUIDE ASSEMBLY

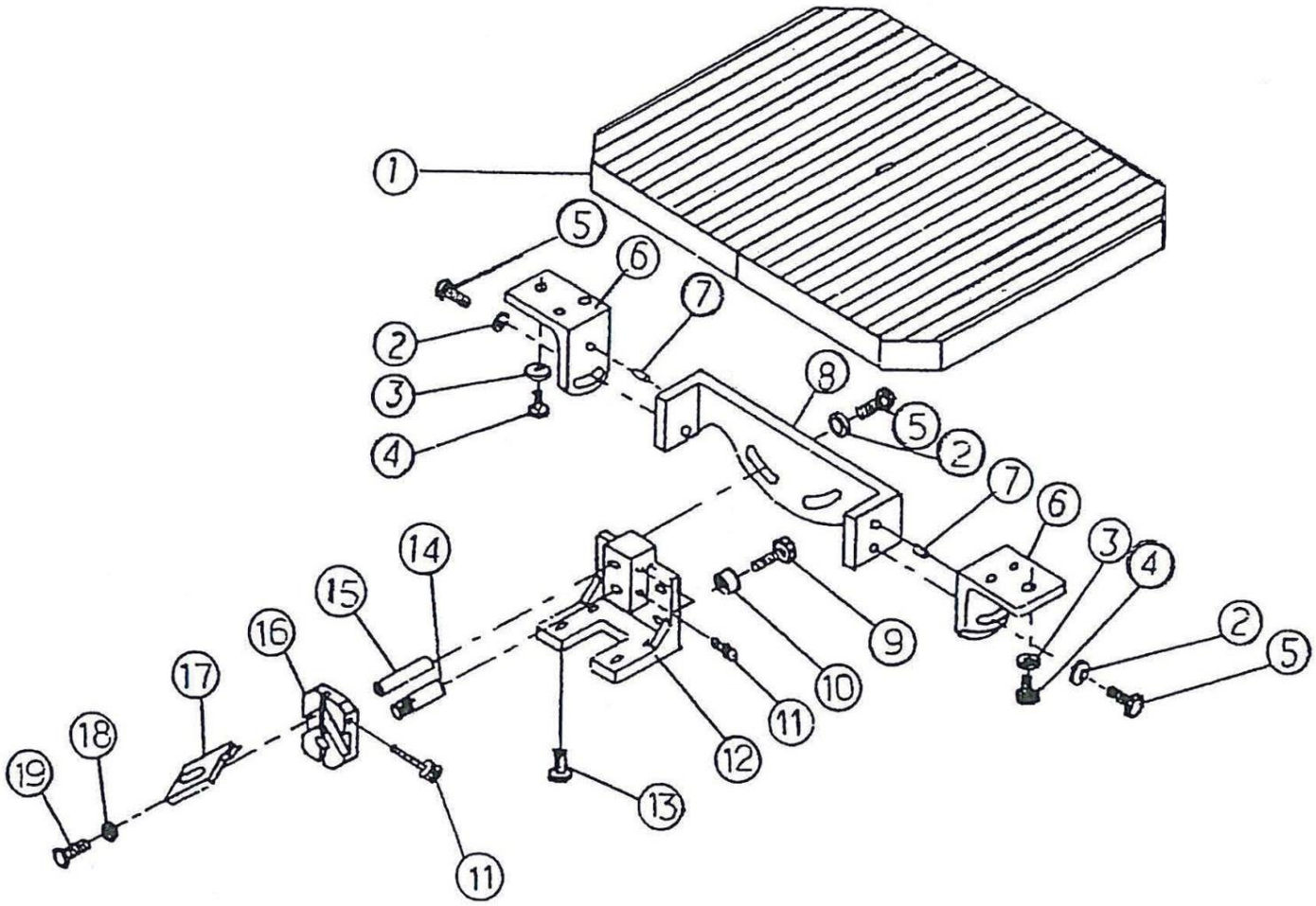

Table and Under Saw Guide Assembly List

Item	Parts No.	Description	Qty.
1	V-40401	Table	1
2	B-36409	Washer	4
3		Washer 3/8"	6
4		Hex. Hd. Screw M10 x 30	6
5		Hex. Hd. Screw M10 x 50	4
6	V-40402	Bracket	2
7	B-36407	Pin	2
8	B-36403	Bracket	1
9		Thumb Hd. Screw M6 x 1.0 x 25	2
10	B-36406	Roller	2
11		Soc. Hd. Screw M6 x 30	3
12	B-36404	Table Bed	1
13		Hex. Hd. Screw M10 x 25	4
14	V-40208	Support Bar	1
15	V-40207	Back Up Support	1
16	V-40205	Under Insert Holder	1
17	V-40206	Insert	2
18		Spring Washer 1/4"	2
19		Soc. Hd. Screw M6 x 1.0 x 25	2

DRIVE ASSEMBLY

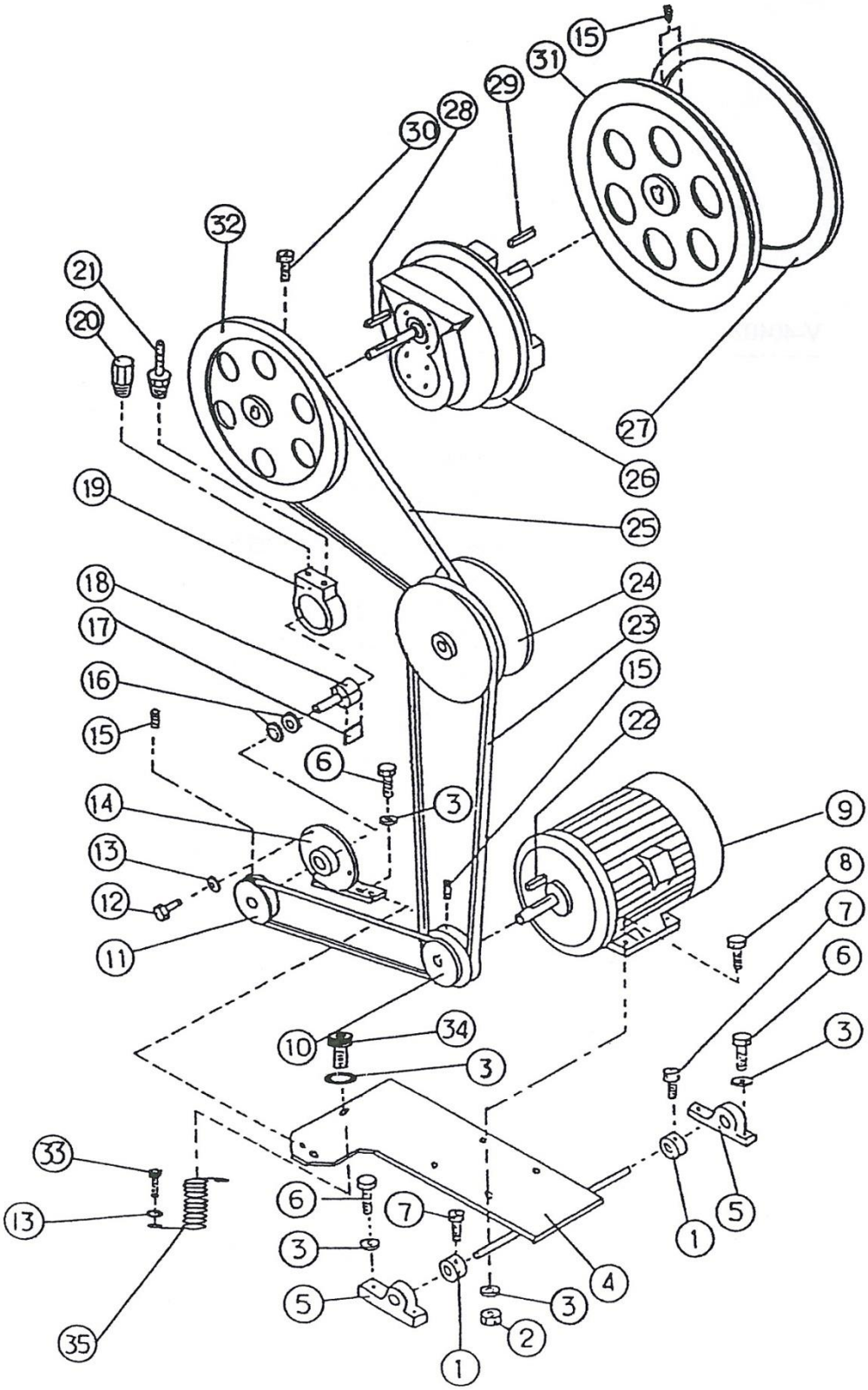

Drive Assembly List

Item	Parts No.	Description	Qty.
1	B-36521	Fixed Ring	2
2		Nut M8 x 1.25	4
3		Washer 3/8"	10
4	V-40501	Motor Base	1
5	V-40502	Bracket	2
6		Hex. Hd. Screw M8 x 1.25 x 25	6
7		Socket Hd. Screw M6 x 1.0 x 12	2
8		Hex. Hd. Screw M8 x 1.25 x 30	4
9		Motor 2HP	1
10	V-40503	Motor Pulley	1
11	B-36601	Air Injection Pulley	1
12		Hex. Hd. Screw M6 x 1.0 x 25	3
13		Spring Washer 1/4"	3
14	B-36602	Air Injection Seat	1
15		Socket Hd. Screw M8 x 125 x 12	4
16		Bearing 6201ZZ	2
17	B-36605	Air Injection Seat	4
18	B-36604	Air Injection Shaft	1
19	B-36603	Air Injection Body	1
20	B-36606	Air Injection Input	1
21	B-36607	Air Injection Output	1
22		Key 8 x 8 x 40	1
23		V-Belt B-45	1
24		Variable Speed Pulley Assembly	1
25		V-Belt B-65	1
26		Transmission Assembly	1
27		Rubber Tire	1
28		Key 6 x 6 x 40	1
29		Key 6 x 6 x 45	1
30		Socket Hd. Screw M8 x 1.25 x 25	2
31	V-40302	Drive Wheel	1
32	V-40504	Input Pulley	1
33		Soc. Hd. Screw M6 x 1.0 x 20	1
34		Soc. Hd. Screw M8 x 1.25 x 20	1
35		Helical Spring	1

VARIABLE SPEED PULLEY ASSEMBLY

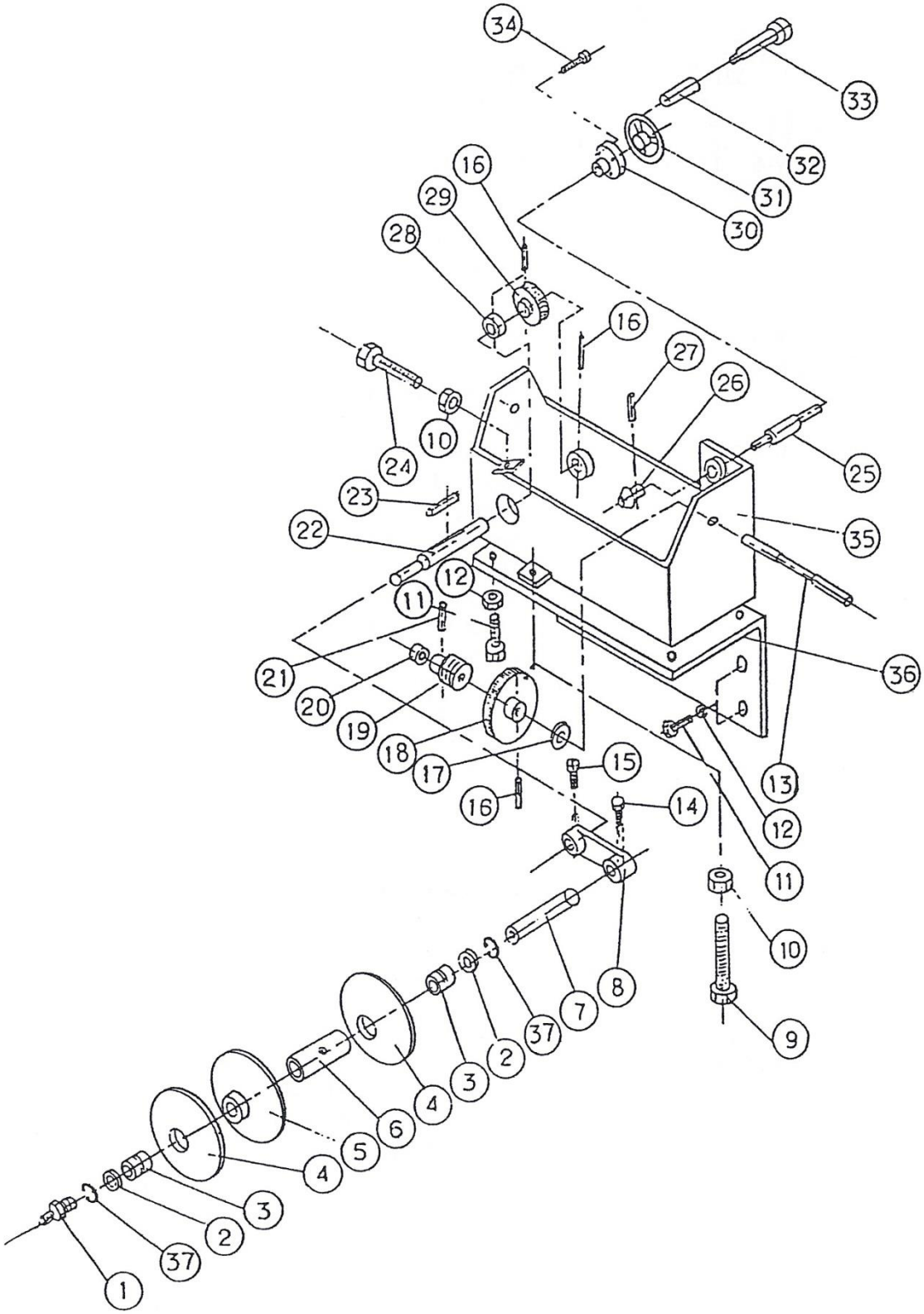

Variable Speed Pulley Assembly List

Item	Parts No.	Description	Qty.
1		Grease Nipple 1/8 Pt	1
2		Oil Seal 25/37/B	2
3		Needle Bearing RNA4904	2
4	B-36501	Fixed Flange	2
5	B-36502	Movable Flange	1
6	V-40506	Bearing Sleeve	1
7	V-40505	Shaft	1
8	V-40517	Adjustable Arm	1
9		Screw M10 x 1.5 x 50	1
10		Nut M10 x 1.5	2
11		Screw M8 x 1.25 x 30	8
12		Nut M8 x 1.25	8
13	V-40515	Worm Gear Shaft	1
14		Screw M8 x 1.25 x 25	2
15		Screw M8 x 1.25 x 25	2
16		Spring Pin 5 x 50	1
17		Bearing 51103	1
18	V-40513	Bevel Gear (Big)	1
19	V-40519	Worm Gear	1
20	V-40522	Worm Gear Washer	1
21		Spring Pin 5 x 32	1
22	V-40516	Worm Wheel Shaft	1
23		Key 7 x 7 x 30	1
24		Screw M10 x 1.5 x 45	1
25	V-40529	Handle Wheel Shaft	1
26	V-40514	Bevel Gear (Small)	1
27		Pin 5 x 22	1
28	V-40523	Worm Wheel	1
29	V-40518	Worm Wheel	1
30	V-40638	Handle Wheel Flange	1
31		Handle Wheel	1
32		Movable Handle	1
33		Handle Movable Sleeve	1

Item	Parts No.	Description	Qty.
34		Screw M6 x 1.0 x 15	1
35	V-40520	Variable Pitch Drive	1
36	V-40521	Stand Variable Pitch Drive	1
37		C-Snap Ring H-37	2

TRANSMISSION ASSEMBLY

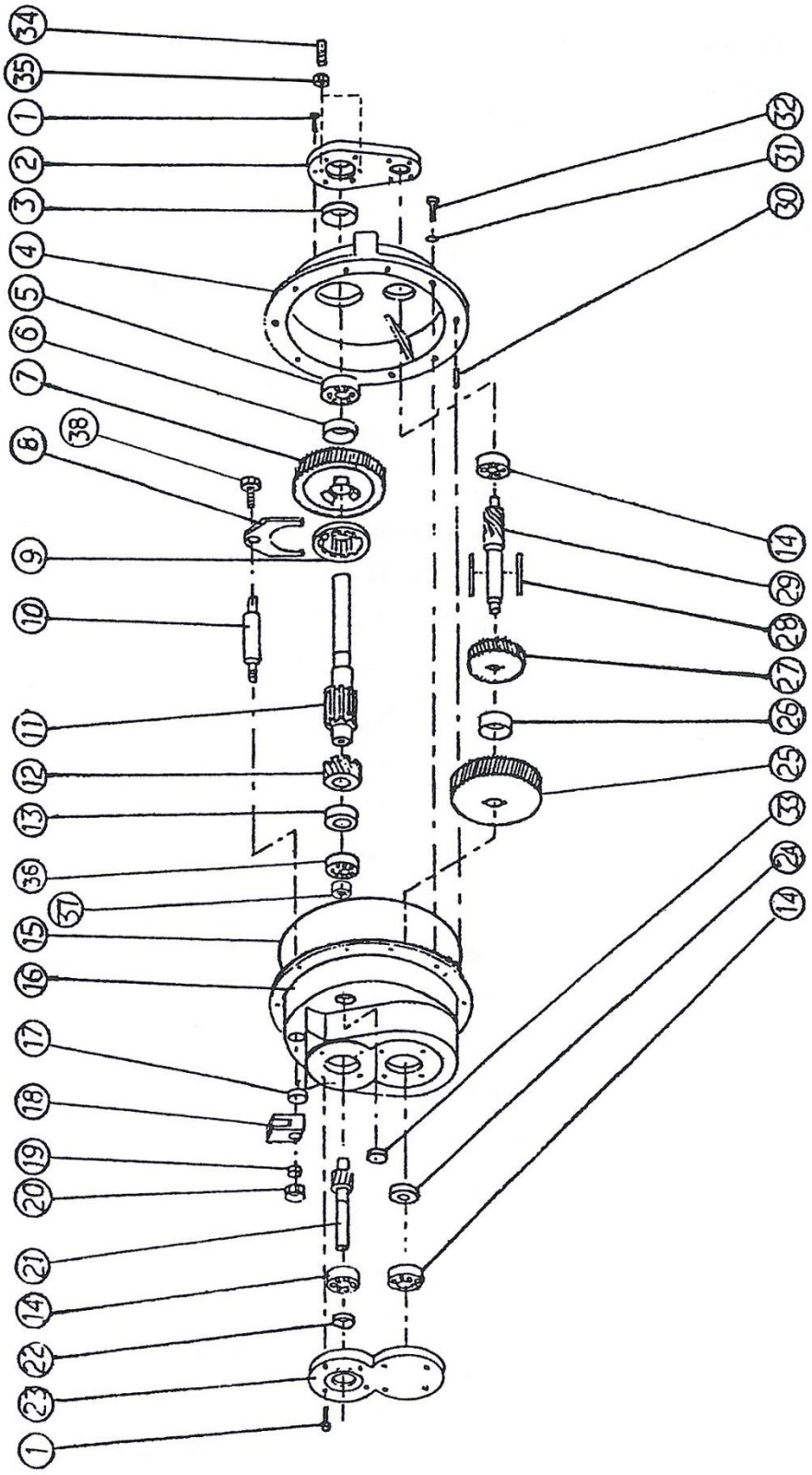

Transmission Assembly List

Item	Parts No.	Description	Qty.
1		Hex. Hd. Screw M6 x 15	17
2	V-40604	Spindle Cover	1
3		Oil Seal 28/40/8	1
4	V-40601	Cover	1
5		Bearing 6206	1
6	V-40616	Washer	1
7	V-40609	Helical Gear 12P x 46T	1
8	V-40617	Clutch Holder	1
9	V-40611	Clutch	1
10	V-40618	Shaft	1
11	V-40612-1	Output Shaft	1
12	V-40610	Helical Gear 12P x 45T	1
13	V-40614-1	Washer	1
14		Bearing 6204	3
15		O-Ring 1517-47	1
16	V-40602	Cover	1
17		Oil Seal 16/24/5	1
18	V-40621	Shaft Block	1
19		Spring Washer 1/2"	1
20		Nut M12 x 1.75	1
21	V-40605-1	Input Shaft 12P x 11T	1
22		Oil Seal 20/30/8	1
23	V-40603	Spindle Cover	1
24	V-40615	Washer	1
25	V-40607	Helical Gear 12P x 46T	1
26	V-40613	Washer	1
27	V-40606	Helical Gear 12P x 35T	1
28		Key 6 x 6 x 52	2
29	V-40608	Helical Gear 12P x 11T	1
30		Spring Pin 05	2
31		Spring Washer 5/16"	8
32		Soc. Hd. Screw M8 x 1.25 x 30	8
33		Oil Leveler	1

Item	Parts No.	Description	Qty.
34		Soc. Hex Hd. Screw M6 x 1.0 x 15	2
35		Nut M6 x 1.0	2
36		Bearing 6007	1
37		Bearing NK19116	1
38		Screw M8 x 1.25 x 25	1

SPEED RANGE GEARSHIFT ASSEMBLY

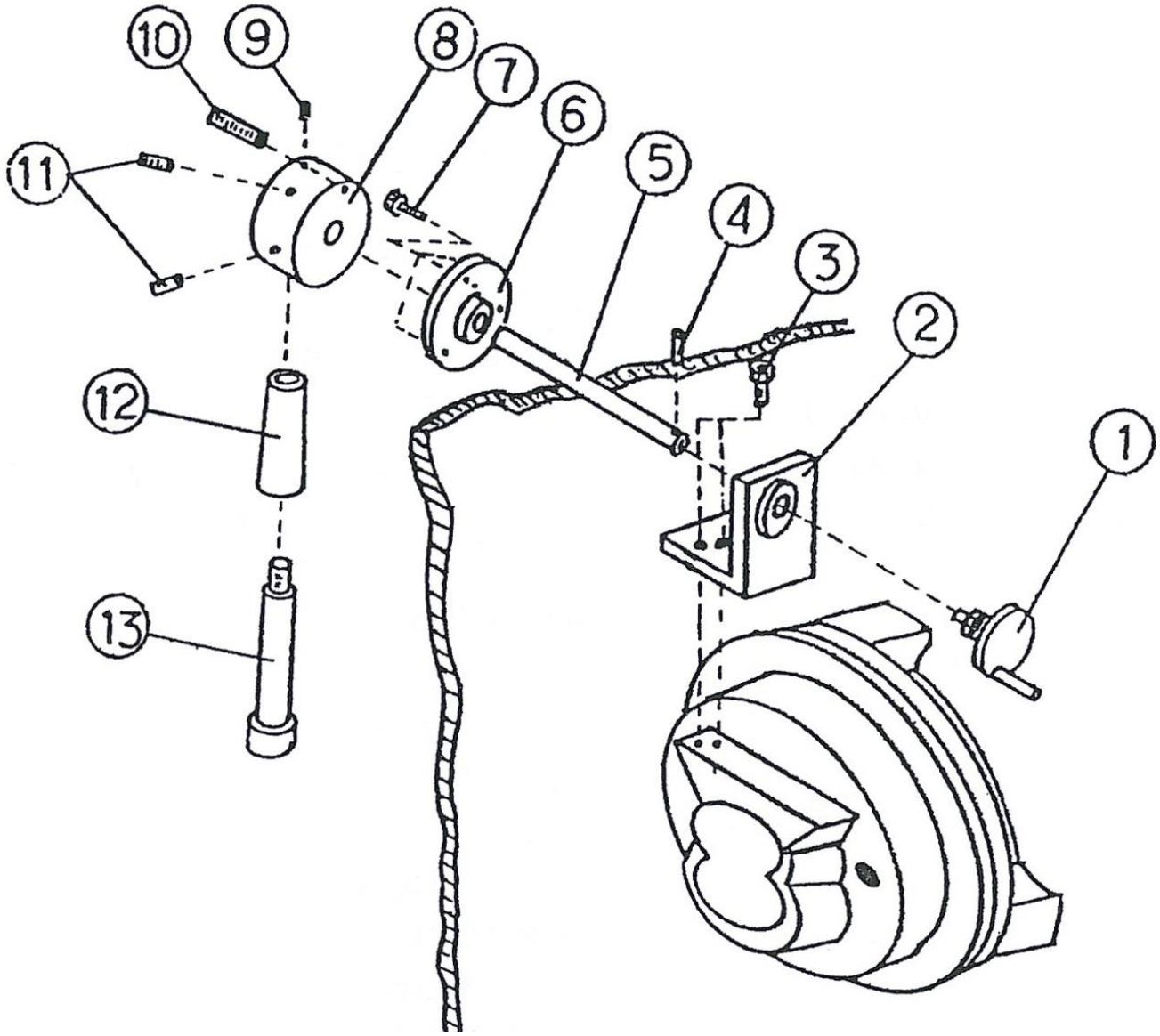

Speed Range Gearshift Assembly List

Item	Parts No.	Description	Qty.
1	V-40619	Cam	1
2	V-40620	Bracket	1
3		Soc. Hd. Screw M8 x 1.25 x 25	2
4		Spring Pin 05 x 22	1
5	V-40639	Shaft	1
6	V-40637	Bracket	1
7		Soc. Hd. Screw M6 x 1.0 x 20	3
8	V-40631	Gear Shaft Pulley	1
9		Lock Screw M6 x 1.0 x 6	1
10		Steel Ball Adjust Screw	1
11		Lock Screw M8 x 1.25 x 15	2
12		Handle Movable Sleeve	1
13		Movable Handle	1

IDLE WHEEL ASSEMBLY

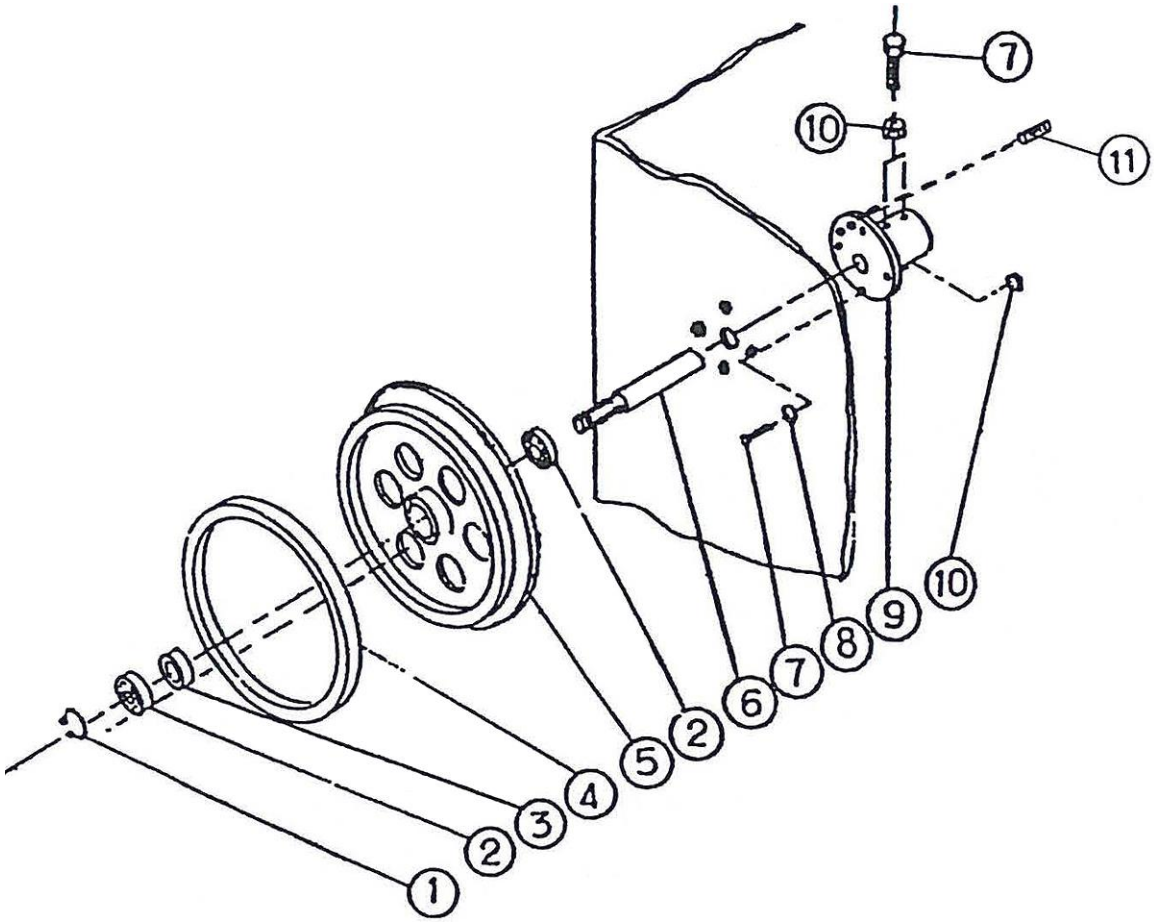

Idle Wheel Assembly List

Item	Parts No.	Description	Qty.
1		External Snap Ring S-15	1
2		Bearing 6203ZZ	2
3	V-100310	Spacer	1
4		Rubber Tire	1
5	V-100308	Idle Wheel	1
6	V-100309	Shaft	1
7		Hex Head Screw M8 x 1.25 x 25	6
8		Spring Washer 5/16”	4
9	V-100311	Flange	1
10		Nut M8 x 1.25	6
11		Lock Screw M8 x 1.25 x 15	2

WELDER ASSEMBLY

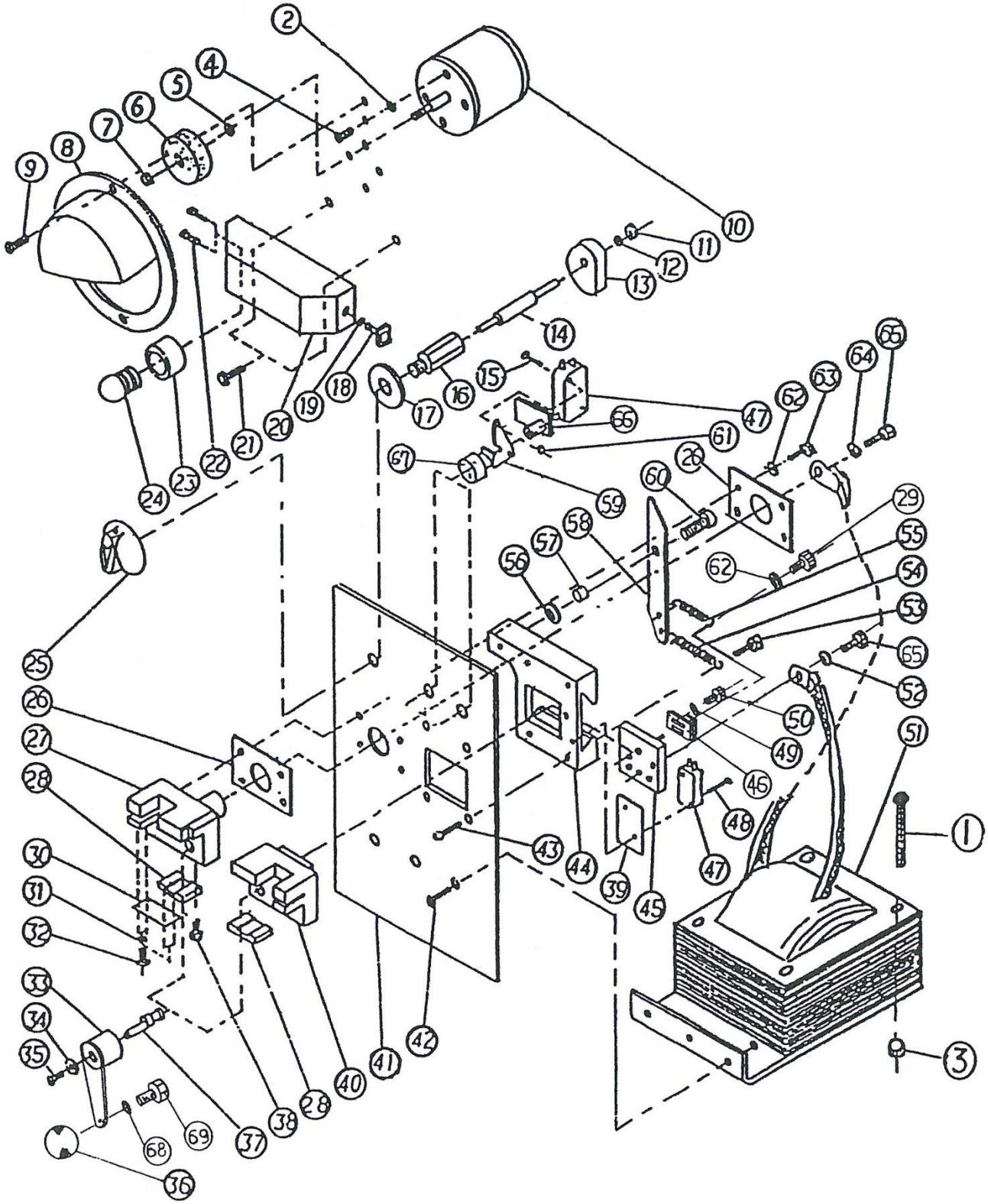

Welder Assembly List

Item	Parts No.	Description	Qty.
1		Screw M6 x 1.0 x 60	4
2		Washer 1/4"	4
3		Nut M6 x 1.0	4
4		Round Hd. Screw. M6 x 1.0 x 15	4
5		Washer 5/16"	2
6		Grinding Wheel	1
7		Nut M6 x 1.0	1
8	B-36120	Protector Cover	1
9		Flat Hd. Screw M5 x 0.8 x 12	2
10		Grinder Motor 1/8hp (.1kw)	1
11		Nut M6 x 1.0	1
12		Spring Washer 1/4"	1
13	W-16115	Cam	1
14	W-16111	Shaft	1
15		Round Hd. Screw M3 x 0.5 x 12	4
16	W-16116	Tube	1
17		Washer 1/2”	1
18		Lamp Switch	1
19		Nut M12	1
20	W-16101	Lamp Shade	1
21		Hex Hd. Screw M6 x 1.0 x 15	2
22		Round Hd. Screw M3 x 0.5 x 10	2
23		Lamp Holder	1
24		Lamp 5W 110V or 24V	1
25		Turn Knob	1
26	W-16112	Insulating Plate	2
27	W-16104	Fixed Pole Jaw	1
28	W-16107	Lower Fixed Block	2
29		Screw M5 x 0.8 x 6	1
30	W-16108	Connect Plate	2
31		Spring Washer 1/8"	8
32		Round Hd. Screw M3 x 0.5 x 15	8
33	W-16109	Tight Handle (left)	1
33A	W-16110	Tight Handle (right)	1

Item	Parts No.	Description	Qty.
34		Washer 3/16"	2
35		Round Hd. Screw M4 x 0.7 x 10	2
36		Plastic Ball	2
37	W-16111	Eccentric Shaft	2
38		Round Hd. Screw M5 x 0.8 x 10	2
39		Insulating Plate 20 x 35 x 0.5	1
40	W-16103	Slide Pole Jaw	1
41	W-16102	Panel	1
42		Flat Hd. Screw M6 x 1.0 x 8	3
43		Flat Hd. Screw M6 x 1.0 x 10	4
44	W-16105	Slide Track	1
45	W-16106	Slide Block	1
46		Spring Adjustment Seat	1
47		Micro Switch V-1A	5
48		Round Hd. Screw M3 x 0.5 x 15	2
49		Washer 4.5Ø	2
50		Screw M4 x 0.7 x 8	2
51		Transformer 2.4KVA	1
52		Washer 114"	1
53		Round Hd. Screw M6 x 1.0 x 15	1
54		Tension Spring 1Ø x 10Ø x 30	1
55		Tension Spring 1Ø x 10Ø x 20	1
56		Washer 8.5Ø	1
57	W-16120	Spacer	1
58	W-16118	Spring Lever	1
59		Touch Seat	2
60	W-16117	Screw	1
61		Nut M3 x 0.5	4
62		Washer 1/4"	4
63		Round Hd. Screw M6 x 1.0 x 12	4
64		Washer 1/4"	1
65		Round Hd. Screw M6 x 1.0 x 10	1
66		Touch Place	2
67		Button	2
68		Spring Washer 5/16"	1
69		Screw M8 x 1.25 x 12	1

MACHINE BODY ASSEMBLY

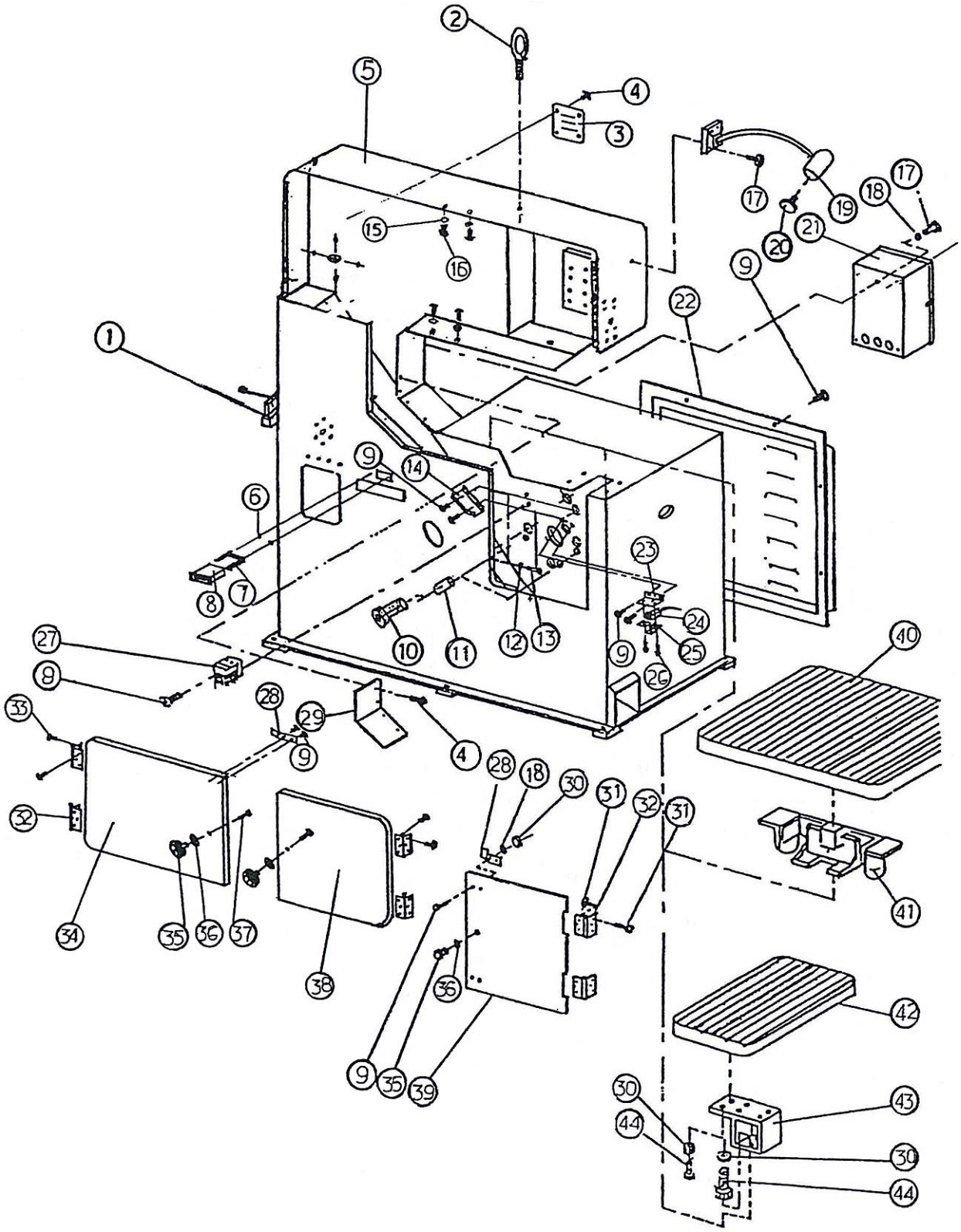

Machine Body Assembly List

Item	Part No.	Description	Qty.
1	B-36140	Blade Shear	1
2		Hanger	1
3	B-36114	Cover	1
4		Rd. Hd. Screw M5 x 0.8 x 8	6
5		Machine Body	1
6		Nut M4 x 0.7	2
7		Fixture	1
8		Speed Meter	1
9		Philips Rd. Hd. Screw M6 x 1.0 x 12	8
10		Rd. Hd. Screw M10 x 1.5 x 35	4
11		Screw M8 x 1.25 x 15	4
12		Nut M4 x 0.7	4
13		Screw M4 x 0.7 x 15	2
14	B-36116	Chip	1
15		Washer	4
16		Philips Rd. Hd. Screw M4 x 0.7 x 8	4
17		Screw M6 x 1.0 x 15	5
18		Washer M6.5	11
19		Work Lamp	1
20		Lamp (Bulb) 20W/12V	1
21	V-40115	Electrical Enclosure	1
22	V-40113	Rear Cover	1
23		Fast Seat	1
24		Influencer	1
25		Fast Plate	1
26		Philips Rd. Hd. Screw M3 x 0.5 x 8	2
27	B-36153	Chip Brush	1
28		Snap Catch	6
29		Blade Protection Cover	1
30		Nut M6 x 1.0	4
31		Screw M5 x 0.8 x 12	12
32		Hinge	6
33		Screw M5 x 0.8 x 10	24

Item	Part No.	Description	Qty.
34		Left Door	1
35		Holder	3
36		Washer M8.5	3
37		Screw M8 x 1.25 x 12	3
38		Right Door	1
39		Lower Door	1
40	V-40401	Table	1
41		Table Seat	1
42	V-40402	Assistant Table	1
43	V-40403	Assistant Table Stand	1
44		Screw M8 x 1.25 x 40	4

NOTES

NOTES

BAILEIGH INDUSTRIAL HOLDINGS LLC
1625 DUFEK DRIVE MANITOWOC, WI 54220
PHONE: 920. 684. 4990 FAX: 920. 684. 3944
www.baileigh.com

BAILEIGH INDUSTRIAL HOLDINGS LTD. UNIT D SWIFT POINT
SWIFT VALLEY INDUSTRIAL ESTATE, RUGBY
WEST MIDLANDS, CV21 1QH UNITED KINGDOM
PHONE: +44 (0)24 7661 9267 FAX: +44 (0)24 7661 9276
WWW.BAILEIGH.CO.UK